VIRTUAL MEETING OF THE BIRMINGHAM PLANNING BOARD
WEDNESDAY, APRIL 14, 2021
7:30 PM
https://zoom.us/j/111656967 or dial: **877-853-5247 Toll-Free, Meeting Code: 111656967**

A. Roll Call
B. Review and Approval of the Minutes of the regular meeting of **March 24, 2021**
C. Chairpersons' Comments
D. Review of the Agenda

E. Special Land Use Permit & Final Site Plan & Design Review

1. **720 N. Old Woodward, Vinewood Bistro (Lower Level in Kohler Building)**, Special Land Use Permit and Final Site Plan and Design Review request to consider approval of Vinewood, a new bistro proposed at the rear of the building, including the service of alcoholic liquor **(Postponed from February 24, 2021)**.

F. Study Session Items

Rules of Procedure for Study Sessions: Site Plan and Design Review, Special Land Use Permit Review and other review decisions will not be made during study sessions; Each person (member of the public) will be allowed to speak at the end of the study session; Each person will be allowed to speak only once; The length of time for each person to speak will be decided by the Chairman at the beginning of the meeting; Board members may seek information from the public at any time during the meeting.

1. **Solar Panel Regulations**
2. **Glazing Standards**

G. Miscellaneous Business and Communications:
   a. Communications
   b. Administrative Approval Correspondence
   c. Draft Agenda for the next Regular Planning Board Meeting **(April 28, 2021)**
   d. Other Business

H. Planning Division Action Items
   a. Staff Report on Previous Requests
   b. Additional Items from tonight's meeting

I. Adjournment

Notice: Due to Building Security, public entrance during non-business hours is through the Police Department—Pierce St. Entrance only.
Individuals with disabilities requiring assistance to enter the building should request aid via the intercom system at the parking lot entrance gate on Henrietta St.

Persons with disabilities that may require assistance for effective participation in this public meeting should contact the City Clerk's Office at the number (248) 530-1880, or (248) 644-5115 (for the hearing impaired) at least one day before the meeting to request help in mobility, visual, hearing, or other assistance.

Las personas con incapacidad que requieren algún tipo de ayuda para la participación en esta sesión pública deben ponerse en contacto con la oficina del escribano de la ciudad en el número (248) 530-1800 o al (248) 644-5115 (para las personas con incapacidad auditiva) por lo menos un dia antes de la reunión para solicitar ayuda a la movilidad, visual, auditiva, o de otras asistencias. (Title VI of the Civil Rights Act of 1964).

City Of Birmingham
Regular Meeting Of The Planning Board
Wednesday, March 24, 2021
Held Remotely Via Zoom And Telephone Access

Minutes of the regular meeting of the City of Birmingham Planning Board held on March 24, 2021. Chair Scott Clein convened the meeting at 7:30 p.m.

A. Roll Call

Present: Chair Scott Clein; Board Members Robin Boyle, Bert Koseck, Daniel Share, Janelle Whipple-Boyce, Bryan Williams; Alternate Board Members Jason Emerine, Nasseem Ramin; Student Representative Daniel Murphy (all located in Birmingham, MI)

Absent: Board Member Stuart Jeffares; Student Representative Jane Wineman

Administration: Jana Ecker, Planning Director ("PD")
Brooks Cowan, City Planner ("CP")
Laura Eichenhorn, City Transcriptionist

Fleis and Vandenbrink:
Julie Kroll

03-040-21

B. Approval Of The Minutes Of The Regular Planning Board Meeting of March 10, 2021

Motion by Mr. Boyle
Seconded by Mr. Williams to approve the minutes of the Regular Planning Board Meeting of March 10, 2021 as submitted.

Motion carried, 7-0.

ROLL CALL VOTE
Yeas: Boyle, Williams, Share, Koseck, Whipple-Boyce, Clein, Ramin
Nays: None

03-041-21

C. Chair's Comments

Chair Clein welcomed everyone to the virtual meeting. He stated the meeting was being held under the auspices of state legislation. Chair Clein reviewed the meeting's procedures.

03-042-21

D. Review Of The Agenda

DRAFT

There were no changes to the agenda.

PD Ecker clarified that the Special Land Use Permit Review for 300 & 394 S. Old Woodward and portions of 294 E. Brown would not actually be discussed until the Final Site Plan review of the item at a later date.

As noted on the agenda, and per the applicant's request, the Board agreed to postpone the Final Site Plan and Design Review for 35001 Woodward – The Maple (Vacant lot, Hunter House) to May 26, 2021.

Motion by Mr. Williams
Seconded by Mr. Koseck to postpone the Final Site Plan and Design Review for 35001 Woodward – The Maple (Vacant lot, Hunter House) to May 26, 2021.

Motion carried, 7-0.

ROLL CALL VOTE
Yeas: Williams, Koseck, Boyle, Share, Whipple-Boyce, Clein, Ramin
Nays: None

03-043-21

E. Special Land Use Permit and Final Site Plan and Design Review

> **1. 856 N. Old Woodward –** Fruition (New Building – The Pearl), Special Land Use Permit Review and Final Site Plan and Design Review to permit the operation of a new food and drink establishment (no alcohol) in an O2 zone district(Postponed from January 27, 2021).

CP Cowan reviewed the item.

In reply to Board inquiries, CP Cowan stated that Building Official Johnson informally indicated that the difference between a specialty food store and a food and beverage establishment is that the latter has the intent to have sit-down dining. CP Cowan stated that, as of yet, a formal opinion as to the difference has not been requested from Building Official Johnson.

Public Comment
Paul Reagan said that since this is an ordinance issue it should be before the Board of Zoning Appeals before it is reviewed by the Planning Board. He said it seemed the reviews were occurring in an incorrect order. He expressed concern that endorsement of an item requiring a variance at the Planning Board level could make the City indirectly liable since it could offer the applicant the impression that the City has approved their plans.

Mr. Williams, PD Ecker and Chair Clein all noted that the BZA has said it would not review items without the Planning Board reviewing the items first.

DRAFT

Mr. Williams noted that the Commission could likely direct a change to the order of Board reviews if they saw fit.

Mr. Boyle said there was a disjuncture between the types of small businesses the City wants to encourage and the effect the City's current parking ordinance has on those types of businesses. He said it was essential that the Planning Board and Commission address the issue.

Mr. Share said he was in favor of the Planning Board's recommendation. He said that limiting the seating to six seats would not put undue pressure on parking in the area. He said the difficulty Fruition was facing was also not primarily a self-created issue, noting that it resulted - from the first-come, first-serve nature of the retail uses in the building. He echoed Mr. Boyle's observation that this is the kind of retail use the City wants to encourage, and said it adds character to the downtown.

Motion by Mr. Share
Seconded by Mr. Koseck to approve the Final Site Plan for 856 N. Old Woodward – Fruition, with the following conditions:

1. That the applicant maintain the proposed floor plan with three tables and six chairs; and
2. That the applicant obtains a variance of 12 parking spaces from the Board of Zoning Appeals.

Motion carried, 6-1.

ROLL CALL VOTE
Yeas: Share, Koseck, Boyle, Whipple-Boyce, Clein, Ramin
Nays: Williams

Motion by Mr. Share
Seconded by Ms. Whipple-Boyce to recommend approval to the City Commission for the Special Land Use Permit for 856 N. Old Woodward – Fruition, with the following conditions:

1. That the applicant, its successors and assignees maintain the proposed floor plan with three tables and six chairs; and
2. That the applicant obtains a variance of 12 parking spaces from the Board of Zoning Appeals.

Motion carried, 6-1.

ROLL CALL VOTE
Yeas: Share, Whipple-Boyce, Koseck, Boyle, Clein, Ramin
Nays: Williams

Chair Clein said he was humbly recommending that the Commission consider changing the order in which Board reviews occur when there is an ordinance issue per Mr. Reagan's comment. He said he was also humbly recommending that the City adjust its parking ordinance to be more consistent with the kinds of businesses it would like to encourage per Mr. Boyle's comment. He

DRAFT

said the Parking Assessment District and parking in the downtown and mixed use districts should also be part of that discussion. He said the parking issue could be considered by the Commission for addition to the Planning Board action list.

03-044-21

F. Community Impact Study Review

1. **300 & 394 S. Old Woodward, and portions of 294 E. Brown** – New Construction (Capital Title/Lutz & Frank's Shoe Service, portions of Coldwell Banker Weir Manual parking lot), Community Impact Study to consider approval of a new 4 story building, including a request to operate a restaurant using an Economic Development Liquor License.

Chair Clein said he would be recusing himself from the Board's considerations regarding 300 & 394 S. Old Woodward and portions of 294 E. Brown. While he said he and the City Attorney determined he had no conflict-of-interest, he was concerned that existing business relationships between his company and parties affiliated with the applicants could lead to the public impression of a conflict-of-interest. The Chair said that if it became clear in the future that his participation in these discussions would not result in the public impression of a conflict-of-interest, he would rejoin deliberations regarding 300 & 394 S. Old Woodward and portions of 294 E. Brown at that time.

The Chair recused himself and left the meeting at 8:06 p.m.

Mr. Emerine filled the Board vacancy stemming from the Chair's recusal and Vice-Chair Williams commenced facilitation of the meeting.

PD Ecker presented the CIS.

Victor Saroki, architect, Richard Rattner, attorney, Dave Stanchak, President of RH, Paul O'Meara, engineer, and Mike Kulka, engineer, were present on behalf of the application.

Ms. Kroll reported she had met with the applicant team and they confirmed they would get her the additional traffic information she had requested.

In reply to Mr. Share, Ms. Kroll explained that the Multi-Modal Transportation Board had recently updated the transportation impact study requirements for the City, and that adding crash analyses was one of the updates. She said that there were no accident mitigation measures beyond signage recommended for the intersection of S. Old Woodward and Brown since the majority of the accidents resulted from parking issues and inattentive drivers. She confirmed some of the parking in front of the building may be eliminated to make room for the valet, and that if that were to occur it may reduce some of the parking accidents.

In reply to a request from Vice-Chair Williams, Mr. Emerine said he could work as the Board's representative with Ms. Kroll and Mr. O'Meara regarding the site's traffic impact.

In reply to Mr. Emerine, Ms. Kroll explained she wanted to produce a conservative traffic analysis to make sure that the site could handle the peak amount of likely traffic. She said that would better ensure that severe issues with traffic around the site do not ensue from the proposed uses.

The Board was advised by the applicant team that furniture loading and unloading would occur infrequently since RH is a showroom only and furniture purchases would be coming from off-site. Vice-Chair Williams and Mr. Boyle asked that furniture delivery trucks still be addressed in upcoming discussions of this item since the pieces in the showroom would likely be refreshed from time to time.

Mr. Saroki stated that the applicant team would resolve all issues raised by City departments and by Ms. Kroll's comments on the traffic study.

Mr. Kulka stated that the site had no more significant environmental issues than similar urban sites. He said any issues found in the environmental study would be remediated.

In reply to Mr. Share, Mr. Kulka committed the applicant team to environmentally remediating the site to residential criteria.

Public Comment
Mr. Reagan said he was concerned about there being insufficient parking proposed and in the area to support the site. He said he was also concerned about the impact of the project on nearby residences.

In reply to a question from David Bloom, Mr. Saroki said one area of the site would gain three parking spaces and another area would lose 11, leading to a net loss of eight parking spaces from the current number available. He also stated that RH paid for the CIS.

Mr. Share complimented the applicant team on their work thus far.

Motion by Mr. Share
Seconded by Mr. Emerine to postpone action on the Community Impact Study as provided by the applicant to April 28, 2021 for the proposed development at 300 - 394 S. Old Woodward and a portion of 294 E. Brown Street, allowing the applicant the opportunity to address the issues raised by the Planning Department in its review of the CIS.

Motion carried, 7-0.

ROLL CALL VOTE
Yeas: Share, Emerine, Williams, Whipple-Boyce, Koseck, Boyle, Ramin
Nays: None

03-045-21

G. Preliminary Site Plan Review

1. **300 & 394 S. Old Woodward, and portions of 294 E. Brown** – New Construction (Capital Title/Lutz & Frank's Shoe Service, portions of Coldwell Banker Weir Manual parking lot), Preliminary Site Plan Review to consider approval of a new 4 story building, including a request to operate a restaurant using an Economic Development Liquor License.

PD Ecker reviewed the item.

In reply to Mr. Share, PD Ecker said she would speak with the Engineering Department regarding possible options for additional sidewalk lighting on Daines.

Mr. Saroki explained that the landscaping off of Daines would be on the Coldwell Banker site with the consent of the property's owner. He stated that RH would be paying for the landscaping.

Mr. Stanchak provided a brief overview of the design inspiration for the Birmingham site and showed a rendering of RH Birmingham.

Jim Arpin, President of the Condo Association at Birmingham Place, said he appreciated what he had seen of the plans so far. Mr. Arpin invited the applicants to meet with the Condo Association.

Vice-Chair Williams encouraged the applicants to take Mr. Arpin up on his invitation.

Mr. Share asked if the applicant team had considered doing a three-story building without the need for a liquor license, since pursuing a four-story building with a liquor license adds complexity.

Mr. Stanchak said the restaurant and alcohol service were integral to creating the hospitable, appealing atmosphere of RH.

Mr. Koseck said he thought the applicant team had gone above and beyond to address site issues. He commended them on designing the building in context, on the attention paid to the aesthetics of all sides of the building, and on the landscaping and hardscaping. He said he thought the designs for the building and grounds would fit well in the neighborhood's context.

There was Board consensus to postpone voting on the item until April 28, 2021 in order to consider the CIS, Preliminary Site Plan, Rezoning Request and Economic Development License for 300 & 394 S. Old Woodward and portions of 294 E. Brown during the same meeting.

Motion by Mr. Boyle
Seconded by Mr. Koseck to postpone the Preliminary Site Plan for 300 - 394 S. Old Woodward and a portion of 294 E. Brown Street pending receipt of an updated CIS addressing all issues noted in the CIS review above and setting the date for reconsideration to be April 28, 2021.

Motion carried, 7-0.

ROLL CALL VOTE

Yeas: Boyle, Koseck, Ramin, Share, Emerine, Whipple-Boyce, Williams
Nays: None

03-046-21

H. Miscellaneous Business and Communications:

a. Communications

PD Ecker notified the Board about the special Commission meeting to discuss the 2040 Master Plan set for April 19, 2021.

b. Administrative Approval Correspondence

PD Ecker presented a request from the Whistle Stop Diner to locate their outdoor seating adjacent to the restaurant and to install two overhead glass doors in the front of the restaurant. She stated that the owners of the diner were willing to pay to move and enhance the sidewalk.

A number of Board members said they preferred these plans to the previous ones, and there was Board consensus to allow for an administrative approval of the requests.

Mr. Koseck stated the glass in the overhead glass doors should not be tinted.

c. Draft Agenda for the next Regular Planning Board Meeting (April 14, 2021)
d. Other Business

I. Planning Division Action Items

a. Staff Report on Previous Requests
b. Additional Items from tonight's meeting

03-047-21

J. Adjournment

No further business being evident, the Vice-Chair adjourned the meeting at 10:58 p.m.

Jana L. Ecker

Planning Director

DRAFT

DRAFT

MEMORANDUM

Planning Division

DATE: **April 14th, 2021**

TO: **Jana Ecker, Planning Director**

FROM: **Nicholas Dupuis, City Planner**

SUBJECT: **720 N. Old Woodward – Vinewood Bistro – Special Land Use Permit, Final Site Plan & Design Review (ALL UPDATES IN BLUE TEXT)**

The subject site, 720 N. Old Woodward, is currently used as a 2-story commercial building fronting onto N. Old Woodward. The applicant has submitted a Special Land Use and Final Site Plan/Design Review application for the introduction of a new bistro in the lower level tenant space. Due to the existing grade on site, the lower level is visible above grade at the rear of the building, which fronts the Rouge River, and is the area proposed to house the outdoor dining required at all bistros in Birmingham. Aside from the new outdoor patio, there are limited changes being proposed to the building exterior and site.

Vinewood Kitchen & Cocktails was selected by the City Commission on October 26, 2020 as one of five bistro applications to move forward to contend for one of the two bistro licenses that may be approved each calendar year. During the selection process, the applicant described Vinewood as a modern casual American restaurant with a "modern meets rustic" interior ambiance.

On February 24th, 2021, the Planning Board postponed the Special Land Use, Final Site Plan and Design Review citing concerns with the proposed Wintergarden, Planning Division and other departmental comments, deliveries, a clear floor plan, and the dumpster configuration. The applicant has submitted revised plans and documentation addressing most of the concerns, and the updates can be found in the relevant sections below.

The Birmingham Code of Ordinances states that a contract for transfer and a Special Land Use Permit are required for all licenses approved under Chapter 10 – Alcoholic Liquors. The licensee must comply with all provisions of the contract and special land use permit, and any amendments thereto as a condition of granting of a requested transfer. Accordingly, the applicant must obtain a recommendation from the Planning Board on the Special Land Use and Final Site Plan/Design Review application, which is then reviewed for final consideration by the City Commission.

1.0 Land Use and Zoning

1.1 Existing Land Use – 2-Story commercial building

1.2 Zoning – O2 (Office Commercial) & D2 (Downtown Overlay)

1.3 Summary of Adjacent Land Use and Zoning –

	North	South	East	West
Existing Land Use	Commercial	Office/Commercial	Public Parking	Multiple-Family Residential
Existing Zoning District	O2 (Office Commercial)	O2 (Office Commercial)	PP (Public Parking)	R6 (Multiple-Family Residential)
Overlay Zoning District	D2	D2	N/A	N/A

2.0 Bistro Requirements

Article 9, Section 9.02, Definitions, of the Zoning Ordinance defines a bistro as a restaurant with a full service kitchen with interior seating for no more than 65 people and additional seating for outdoor dining for no more than 65 people.

Article 3, Section 3.04(C)(10) of the Zoning Ordinance permits bistros in the Downtown Overlay District as long as the following conditions are met:

a. No direct connect additional bar permit is allowed and the maximum seating at a bar cannot exceed 10 seats;
b. Alcohol is served only to seated patrons, except those standing in a defined bar area;
c. No dance area is provided;
d. Only low key entertainment is permitted;
e. Bistros must have tables located in the storefront space lining any street, or pedestrian passage;
f. A minimum of 70% glazing must be provided along building facades facing a street or pedestrian passage between 1’ and 8’ in height;
g. All bistro owners must execute a contract with the City outlining the details of the operation of the bistro; and
h. Outdoor dining must be provided, weather permitting, along an adjacent street or passage during the months of May through October each year. Outdoor

dining is not permitted past 12:00 a.m. If there is not sufficient space to permit such dining on the sidewalk adjacent to the bistro, an elevated, ADA compliant, enclosed platform must be erected on the street adjacent to the bistro to create an outdoor dining area if the Engineering Department determines there is sufficient space available for this purpose given parking and traffic conditions.

i. Enclosures facilitating year round dining outdoors are not permitted.
j. Railings, planters or similar barriers defining outdoor dining platforms may not exceed 42" in height.
k. Outdoor rooftop dining is permitted with the conditions that surrounding properties are not impacted in a negative manner and adequate street level dining is provided as determined by the Planning Board and City Commission. Rooftop dining seats will count towards the total number of permissible outdoor dining seats.

At this time, the applicant appears to meet the requirements listed above. On the interior, the proposed u-shaped bar contains 10 seats and a well defined bar area. There is no dance floor, and there are no indications on the plans there any entertainment will be provided at the proposed restaurant. In totality, the applicant is proposing 64 interior seats, including the 10 at the bar.

As far as exterior conditions, a 38-seat outdoor patio and 26-seat semi-outdoor Winter Garden (64 total) is proposed. However, as noted above, due to the placement of the proposed bistro in the lower level, the patio is located in the rear. Due to this location, there is no traditional storefront in which to place tables. There is a pedestrian walkway located behind the building which accesses several buildings to the north. There have been several decks added to buildings to the north of the subject site that have activated the rear of buildings, and the proposed patio would likely contribute to the activation of this area. In terms of glazing, the applicant is proposing the unique "Winter Garden" semi-enclosed/outdoor space, which is set back into the building behind four fixed wood framed screen panels. The new recessed exterior wall, which is now set 8 ft. 6 in. into the building, is proposed to contain significant glazing.

While technically located outdoors, the proposed Winter Garden does not appear to meet the conditions entirely, in that the means by which it is recessed and enclosed by the first floor above, the existing brick façade and the proposed bronze screen panels almost entirely enclose the space. Although the space is indeed open to the air, it would likely not be as harshly effected by some of the more tolerable months during the outdoor dining offseason. Furthermore, enforcement beyond the permitted outdoor dining season (April-October) would be difficult due to the patio and Winter Gardens placement at the rear and lower level of the building, which is not at all visible from the street, and may not even be evident from any easy vantage point in Parking Lot 6.

Finally, the applicant has indicated that a service station will be provided on the dining patio for trash.

The Vinewood bistro has not yet indicated the hours of operation for the indoor or outdoor dining areas. The placement of the outdoor dining in the rear creates a unique condition for the area in that although the property in not *immediately adjacent* to single or multi-family residentially zoned properties, there are single family residences across the river that may be affected by any noise or light emanating from the proposed patio. The peak summer months of the outdoor dining season may facilitate an improved condition while the foliage along the riverbank is full. However, the reduced natural buffer during the spring and fall may exacerbate any nuisances cause by the dining use. To ensure that the conditions permitting bistros in the Downtown Overlay, **the applicant must submit the indoor and outdoor hours of operation for the proposed restaurant.**

The applicant has submitted two sets of proposed hours for Vinewood, one for summer and one for winter:

Summer Hours:		Winter Hours:	
Monday-Wednesday	11 AM – 12 AM	Monday-Tuesday	3 PM – 12 AM
Thursday-Saturday	11 AM – 1 AM	Wednesday	11 AM – 12 AM
Sunday	10 AM – 11 PM	Thursday-Friday	11 AM – 1 AM
		Saturday	3 PM – 1 AM
		Sunday	10 AM – 11 PM

The applicant has indicated that the proposed hours of operation for the outdoor dining area would be until midnight (12 AM) daily for both seasons. It is unclear at this time if the hours include Sunday nights, in which the indoor hours end at 11 PM. Additionally, the Planning Board requested information on the hours of the two nearest bistros, Market North End and Luxe Bar and Grill. These bistro restaurants have hours listed from 11 AM – 12 PM and 11 AM – 11 PM respectively, Monday through Sunday.

3.0 Setback and Height Requirements

Please see the attached zoning compliance summary sheet for details on setback and height requirements. The following bulk, placement and/or height issues are present:

1. The semi-permanent **roughly 1,323** sq. ft. outdoor dining patio is proposed to be constructed almost entirely on public property. Article 4, Section 4.74 (D)(4)(b) states "above grade encroachments 8 ft. and below: permanent architectural features such as columns, pilasters, belt courses, lintels pediments

and similar features may be approved by the Planning Board to project into the right of way provided they do not create any obstruction and that the encroachment complies with the design review standards set forth in Article 7." Although the dining platform is not considered any of the architectural elements listed above, there are additional projections below 8 ft. in the form of support posts for the proposed awning in the rear. **The Planning Board should consider the approval, modification, or disapproval of the ROW encroachments at or below 8 ft.**

At this time, the applicant has begun the process of executing a lease agreement with the City for the use of this public property, but no such agreement has been completed at this time. **The applicant must enter into a lease agreement for the use of public property for the outdoor dining patio.**

In addition to the encroachments at 8 ft. and below, there are two encroachments that extend 8 ft. and above the public right-of way. The two proposed canopies measure 8 ft. 6 in. and 10 ft. 6 in. from grade in the front and rear respectively. Article 4, Section 4.74 (D)(4)(c) permits these removable elements to encroach into the right-of-way so long as all encroachments with less than 15 ft. of clearance above the sidewalk shall not extend into or occupy more than two-thirds of the width of the sidewalk or 5 ft., whichever is less, and must not interfere with any existing or planned streetscape elements or infrastructure. The rear canopy projects 9 ft. 6 in. into the right of way, but there is no sidewalk present to dictate the projection. The front canopy, however, projects 6 ft. across an existing 6 ft. sidewalk, which does not meet the requirements of the Zoning Ordinance. **The applicant must revise the front canopy projection to measure two-thirds of the width of the sidewalk, or obtain a variance from the Board of Zoning Appeals.**

The applicant has submitted revised plans showing the front canopy projection reduced to 4 ft. The rear canopy projection has been reduced to 5 ft. and has been redesigned without the support posts. Both canopy projections now meet the requirements of Article 4, Section 4.74 (D)(4)(c) of the Zoning Ordinance.

4.0 Screening and Landscaping

4.1 Dumpster Screening – The applicant is proposing to utilize two existing dumpsters that are located along the north end of the Parking Lot 6 facility, which is public property. The applicant is proposing to improve the dumpster area by adding a 6 ft. concrete masonry screen walls with a stone cap on two sides, leaving the east and south sides open.

Article 4, Section 4.54 of the Zoning Ordinance requires dumpsters to be screened from view from all adjacent properties by a 6 ft. masonry screen wall with wood gates. However, Section 4.54 (A) allows for flexibility in the materials, size, height and *placement* of walls in order to allow architectural harmony and usable open space and to accomplish a unified design. At this time, the Planning Division recommends that that Planning Board require the applicant to comply with the Zoning Ordinance to the fullest extent with screening on all sides of the dumpsters with wood gates. Therefore, **the applicant must submit revised site plans and details with a fully screened dumpster enclosure with wood gates.**

Additionally, the applicant has not indicated whether or not the restaurant will be utilizing any other common restaurant waste receptacles such as grease disposal or recycling dumpsters. It is the understanding of the Planning Division that the two waste receptacles that the applicant is proposing to utilize are open to use by other businesses, including another restaurant. The Planning Division is not aware of the pickup schedule for these dumpsters, but it would appear as though adding a restaurant use to the area would cause the dumpsters to fill much more rapidly on a regular basis, which would necessitate either additional dumpsters or a more frequent pickup.

This condition is of particular concern due to the dumpsters' proximity to the Rouge River. Any debris overflow would easily be swept by wind or water into the river causing unnecessary and avoidable pollution of this natural resource. **The Planning Board may wish to consider requiring the applicant to add an additional solid waste dumpster, recycling dumpster, and/or grease receptacle to the plans to ensure that the waste receptacles may service the proposed restaurant and other contributors sufficiently.**

The applicant has submitted revised plans with a dumpster enclosure constructed of a 6 ft. painted masonry screen wall with painted wood gates. The applicant has added a grease trap within the enclosure, but has not added any additional trash or recycling dumpsters (proposing to maintain the two existing dumpsters). Additionally, it has come up that there has not been a formal agreement executed by the City and the owner of the dumpster placed in Parking Lot 6 as of yet. Although the proposed dumpster screening meets the requirements of the Zoning Ordinance, the applicant must resolve the issues with the dumpster placement on public property.

4.2 Parking Lot Screening – The subject site is located within the Parking Assessment District. Therefore, no additional off-street parking facility and accompanying screening is required or proposed.

4.3 Mechanical Equipment Screening – The applicant is proposing a new makeup air unit and exhaust fan for the bistro on the rooftop adjacent to 5 additional existing RTU's. The applicant is proposing to add roughly 171 ft. of prefabricated corrugated metal to screen all of the new and existing units. The applicant has submitted specification sheets for the proposed screen wall, but has not submitted specification sheets for the new mechanical units or the height of the proposed screen wall to ensure that the units will be fully screened. **The applicant must submit specification sheets for all new RTU's and the proposed height of the screening material to ensure full screening from public view.**

The applicant has submitted revised plans and specification sheets for the rooftop units that demonstrate the new units as fully screened from view by the proposed 8 ft. prefabricated corrugated metal screen.

4.4 Landscaping – The subject site is currently fully developed with no existing landscaping on site. Although no landscaping is required with the introduction of the new bistro, the applicant has proposed 4 small-scale landscaping installments to "green" the space. On the front of the building, the entrance to the Vinewood is proposed to contain Boston Ivy plantings around the front door. The applicant has not shown any planters on the sidewalk in which the ivy would be planted. Rather, it appears as though there may be a small cutout from the sidewalk at the base of the building where the ivy may be planted and grow through a "pocket" behind the wood entrance cladding. This distinction is very important in this area due to the very slim sidewalks present along the N. Old Woodward frontage. **The walking path along this sidewalk must remain unobstructed, and it would seem as though the small cutouts in the sidewalk would both obstruct the sidewalk (if only for a few inches) and create a poor environment for the ivy to survive.**

The applicant is also proposing some Boston Ivy plantings on the exterior of the concrete masonry units that comprise the new outdoor dining facility at the rear and the existing balcony above. **Within the outdoor dining area, six custom wood planters are proposed with seasonal natural river plantings that include grasses and seasonal flowering riverbank types.**

4.5 Streetscape – There are no new streetscape items proposed as a part of this Special Land Use Permit and Final Site Plan/Design Review application. As noted

above, there is no room for any streetscape improvements on the existing sidewalk such as benches, bike racks or waste receptacles.

5.0 Parking, Loading and Circulation

5.1 Parking – The subject site is located within the Parking Assessment District. Therefore, no additional off-street parking facility is required or proposed.

5.2 Loading – The lower level tenant space measures 3,372 sq. ft. No off-street loading spaces are required for the less than 5,000 sq. ft. commercial use.

5.3 Vehicular Circulation and Access – The vehicular circulation and access is proposed to remain the same as is existing. The subject site is currently accessed by two public parking facilities, one on the N. Old Woodward side and one in the rear in Parking Lot 6.

5.4 Pedestrian Circulation and Access – Pedestrians are able to access the new bistro space through a front door on the N. Old Woodward façade as well as a back door accessible to patrons parked in the Parking Lot 6 facility.

6.0 Lighting

The applicant is proposing several lighting additions to the rear of the building, outdoor patio, and signage. The lighting proposed includes 6 gas torches, 7 surface mounted downlights underneath the existing balcony, 2 backlit panels beneath the new awnings, 6 recessed downlights in the winter garden, 1 linear wall washing up light, and 9 underwater lights in 3 proposed fountains.

Type	Location	Color	Light Output
Gas Torches	Edge of patio	Black	N/A
LED Downlights	Under balcony	Black?	?
LED Backlight/Strips	Under canopies	Clear	Up to 450 Lumens
LED Wall Washer	Base of wall panel	Metallic	6491-7286 Lumens
Mini LED Spotlight	Beneath umbrella	Black	4.5 Watt/160 Lumens
Recessed Downlights	Wintergarden	White	11 Watt/850 Lumens
LED Sign Lights	Above patio sign	Black	7 Watt

Article 4, Section 4.21 (D)(1) requires all luminaries to be full cutoff or cutoff, as defined in Section 9.02, and positioned in a manner that does not unreasonably invade abutting or adjacent properties. Exception to cutoff luminaries can be made at the discretion of the Planning Board under any of the following conditions:

a. The distribution of upward light is controlled by means of refractors or shielding to the effect that it be used solely for the purpose of decorative enhancement of the luminaire itself and does not expel undue ambient light into the nighttime environment.
b. The luminaire is neither obtrusive nor distracting, nor will it create a traffic hazard or otherwise adversely impact public safety, with appropriate methods used to eliminate undesirable glare and/or reflections.
c. The luminaire is consistent with the intent of the Master Plan, Urban Design Plan(s), Triangle district plan, Rail District plan and/or Downtown Birmingham 2016 Report, as applicable.
d. The scale, color, design or material of the luminaire will enhance the site on which it is located, as well as be compatible with the surrounding buildings or neighborhood.
e. Lighting designed for architectural enhancement of building features (i.e. architectural enhancement lighting). Appropriate methods shall be used to minimize reflection and glare.
f. The site lighting meets all requirements set forth in this ordinance including, but not limited to, light trespass and nuisance violations.

At this time, the linear wall washing up light located at the base of the decorative wall panel is not full cutoff as defined in Section 9.02. The Planning Board should discuss the lighting concept in relation to the residential areas across the river to the east and the neighboring properties.

Additionally, the applicant has not included a photometric study studying the light intensity levels at the property line, or at 5 ft. beyond the property line as permitted for zero-lot-line buildings. The addition of 31 new light fixtures necessitates a photometric study to confirm appropriate light intensity levels. **The applicant must submit a photometric plan showing the light intensity levels 5 ft. beyond the property line.**

The applicant has now submitted a photometric plan demonstrating the proposed light intensity on the site. Article 4, Section 4.21 (E)(1) of the Zoning Ordinance states that the intensity of light on a site shall not 1.5 maintained foot-candles at any property line that abuts a non-residential zoning district. The light intensity shall be measured at 6' above ground level on a vertical plane. Additionally, the intensity of light on a site which provides a front setback of less than 5 ft. shall be measured from 5 ft. beyond the front property line. The photometric plan submitted shows illumination levels far exceeding 1.5 maintained foot candles on both the front and rear elevations. The light intensity is as high as 10.0 at roughly 6 ft. beyond the front property line at the front and as high as 11.6 in the rear at roughly the same distance.

The applicant must submit a revised photometric plan and associated lighting plan, or obtain a variance from the Board of Zoning Appeals.

7.0 Departmental Reports

7.1 Engineering Division – The Engineering Division has provided the following comments:

- The Engineering Division would like to see the grades of the existing elevations of the ground around the planned work area and all final grades to see how it will affect drainage.
- The applicant may be asked to address the failing retaining wall at the northeast side of the patio during the construction of the patio.
- A Soil Erosion Soil Control permit will be required for any work that disturbs the ground.
- The proposed ramp must be evaluated for ADA compliance.

7.2 Department of Public Services – The Department of Public Services has not submitted and comments at this time. All comments received will be shared with the Planning Board as they are received.

7.3 Fire Department – The Fire Department has not provided any comments at this time. All comments received will be shared with the Planning Board as they are received.

7.4 Police Department – The Police Department has no concerns at this time.

7.5 Building Division – The Building Division has provided the following Comments:

As requested, the Building Department has examined the plans for the proposed project referenced above. The plans were provided to the Planning Department for site plan review purposes only and present conceptual elevations and floor plans. Although the plans lack sufficient detail to perform a code review, the following comments are offered for Planning Design Review purposes and applicant consideration:

Applicable Building Codes:

- 2015 Michigan Building Code. Applies to all buildings other than those regulated by the Michigan Residential Code.
- 2015 Michigan Mechanical Code. (Residential requirements for mechanical construction in all detached one and two-family dwellings and multiple single-family dwellings (townhouses) not more than three stories

in height with a separate means of egress and their accessory structures are contained in the Michigan Residential Code)

- 2015 Michigan Plumbing Code. (Residential requirements for plumbing construction in all detached one and two-family dwellings and multiple single-family dwellings (townhouses) not more than three stories in height with a separate means of egress and their accessory structures are contained in the Michigan Residential Code)
- 2017 National Electrical Code along with the Michigan Part 8 Rules. (Residential requirements for electrical construction in all detached one and two-family dwellings and multiple single-family dwellings (townhouses) not more than three stories in height with a separate means of egress and their accessory structures are contained in the Michigan Residential Code)

Review Comments:

- The awning on the N. Old Woodward elevation cannot project over the sidewalk more than two-thirds the width of the sidewalk. (Building Code Section 3202.3.1)
- Encroachments into City Property on the East elevation require City Approval.
- The table and two chairs at the N/W corner of the outdoor dining area appear to encroach into the required length of the landing area of the exit stair door from the tenant space above. The length is required to be 44-inches. (Building Code Section 1010.1.6)
- A guardrail will be required on the open side of the ramp leading up to the exterior dining area where the ramp exceeds 30-inches in height from grade. (Building Code Section 1015.2)
- A fire suppression system may be required if the fire area exceeds the limits in Section 903.2.1.2 of the Building Code.

8.0 Design Review

As noted in the introduction, the overall exterior changes to the building are proposed to be relatively minor in nature. The front of the building will feature an updated entrance for the Vinewood bistro with a new door, wood frame/cladding, and an aluminum folded plate awning. Other changes to the front of the building are the painting of building trim, window frames and the exposed CMU, and a re-shingle of the existing black shingle roof. In the rear, the outdoor dining deck is proposed to be constructed of ~~CMU and exposed aggregate~~ **wood plank decking** with a wire mesh guardrail enclosure. The new entrance in the rear will mimic the front entrance with a new door and awning, and the existing openings in the rear, which formerly contained

windows, are now proposed to contain fixed wood framed bronze screen panels to create the semi-outdoor Winter Garden dining area. A full list of new materials and colors is as follows:

Material	Location	Color
Paint	Front façade building trim, side & rooftop CMU	
Stained Wood	Front door, wood cladding	
Aluminum	Front awning, decorative wall panel	
~~Concrete Masonry Unit~~	~~Rear patio~~	
Wood Plank Cladding	**Patio knee wall**	
Wood Decking	**Patio, winter garden flooring**	
Steel Tubing	ADA ramp handrails	
Welded Wire Mesh	Patio guardrail	
Bronze Mesh	Winter Garden screen panels	
Stained Wood	Rear entry door, mesh panel frames	
Copper Cladding	Ductwork shaft, decorative wall panel	
Canvas	Umbrellas	
Corrugated Metal	RTU screen wall	?
Aluminum	Table tops & chairs	
Glass	New exterior wall behind Winter Garden	?

<u>Signage</u>

The applicant is also proposing 2 new signs as a part of the exterior renovations for the new bistro. The first sign (Sign #1) is located on the front awing/canopy and the second sign (Sign #2) is located on south side of the new patio on the face of the ~~CMU's~~ **wood planks** that comprise the base of the patio. The principal building frontage measures 60 ft., which permits the building up to 60 sq. ft. of signage. The only existing sign on the building is for the first floor tenant, Kohler, which measures 18.5 sq. ft. leaving 41.5 sq. ft. of signage available for other tenants. Sign #1 is proposed to be cut out of the aluminum canopy valence and measures in at 1.3 sq. ft., while Sign #2 is constructed of 8 in. aluminum letters and measures in at 4 sq. ft., which brings the proposed combined sign area to 23.8 sq. ft. (18.5 + 4 + 1.3 = 23.8). Both signs are proposed to be illuminated, Sign #1 with internal LED's and Sign #2 with 3 architectural accent lights.

There are several issues with regards to signage. Sign #1's placement on the front canopy requires the sign to conform to the canopy sign rules, which state that the canopy valence may not exceed 18 in. in height, and the total signage may not exceed 33% of the canopy valence length. **The applicant has designed the canopy valence**

at exactly 18 in. in height, and the area of the lettering, at roughly 1.3 sq. ft., is below the 33% maximum required for canopy signs.

Sign #2 and its proposed location on the ~~CMU's~~ **wood plank** of the dining platform conflicts with Section 1.3 of the Sign Ordinance that states that no sign shall be erected or placed in the public right-of-way. Although the applicant will be seeking a lease from the City for the private use on public property, the property is still considered public and thus may not contain any signage.

Thus, **the applicant must revise the sign plan proposed to meet the requirements of the Sign Ordinance.**

9.0 Required Attachments

	Submitted	Not Submitted	Not Required
Existing Conditions Plan	☒	☐	☐
Detailed and Scaled Site Plan	☒	☐	☐
Certified Land Survey	☒	☐	☐
Interior Floor Plans	☒	☐	☐
Landscape Plan	☐	☐	☒
Photometric Plan	☒	☐	☐
Colored Elevations	☒	☐	☐
Material Specification Sheets	☒	☐	☐
Material Samples	☒	☐	☐
Site & Aerial Photographs	☒	☐	☐

10.0 Bistro Criteria

Chapter 10, Alcoholic Liquors, section 10-82 provides a limitation on the number of Bistro Licenses that the City Commission may approve, and provides selection criteria to assist the Planning Board and City Commission in evaluating applications for Bistro Licenses. Section 10-82 states:

(1) New establishments. Two (2) Bistro Licenses may be approved each calendar year to applicants who do not meet the definition of existing establishments as set forth in (a)(1) above. In addition to the usual criteria used by the city commission for liquor license requests, the commission shall consider the following non-exclusive list of criteria to assist in the determination of which of the new establishment applicants, if any, should be approved:

a. The applicant's demonstrated ability to finance the proposed project.

b. The applicant's track record with the city including responding to city and/or citizen concerns.
c. Whether the applicant has an adequate site plan to handle the bistro liquor license activities.
d. Whether the applicant has adequate health and sanitary facilities.
e. The establishment's location in relation to the determined interest in the establishment of bistros in the Overlay District and the Triangle District.
f. The extent that the cuisine offered by applicant is represented in the city.
g. Whether the applicant has outstanding obligations to the city (ie property taxes, utilities, etc.).

The applicant demonstrated that they will be able to finance the project and maintains a good track record with the City throughout various other property ownerships in the City. The applicant also does not have any outstanding obligations to the City at this time. The bistro plans proposed provide an adequate space to carry out their liquor license activities with proper health and sanitary facilities. The proposed menu that features traditional American cuisine with Mediterranean twists is not over-represented in the area, and it would be the first bistro approved in the northernmost section of Downtown Birmingham.

11.0 Approval Criteria

In accordance with Article 7, section 7.27 of the Zoning Ordinance, the proposed plans for development must meet the following conditions:

(1) The location, size and height of the building, walls and fences shall be such that there is adequate landscaped open space so as to provide light, air and access to the persons occupying the structure.
(2) The location, size and height of the building, walls and fences shall be such that there will be no interference with adequate light, air and access to adjacent lands and buildings.
(3) The location, size and height of the building, walls and fences shall be such that they will not hinder the reasonable development of adjoining property nor diminish the value thereof.
(4) The site plan, and its relation to streets, driveways and sidewalks, shall be such as to not interfere with or be hazardous to vehicular and pedestrian traffic.
(5) The proposed development will be compatible with other uses and buildings in the neighborhood and will not be contrary to the spirit and purpose of this chapter.
(6) The location, shape and size of required landscaped open space is such as to provide adequate open space for the benefit of the inhabitants of the building and the surrounding neighborhood.

In addition, Article 7, Section 7.26 requires applications for a Special Land Use Permit to meet the following criteria:

(1) The use is consistent with and will promote the intent and purpose of this Zoning Ordinance.
(2) The use will be compatible with adjacent uses of land, the natural environment, and the capabilities of public services and facilities affected by the land use.
(3) The use is consistent with the public health, safety and welfare of the city.
(4) The use is in compliance with all other requirements of this Zoning Ordinance.
(5) The use will not be injurious to the surrounding neighborhood.
(6) The use is in compliance with state and federal statutes.

12.0 Recommendation

Based on a review of the site plan submitted, the Planning Division recommends that the Planning Board recommend **APPROVAL** to the City Commission the Special Land Use and Final Site Plan/Design Review application for 720 N. Old Woodward – Vinewood Bistro – with the following conditions:

1. The Planning Board approves/disapproves the outdoor dining patio encroachment into the right-of-way;
2. The applicant must enter into a lease agreement for the use of public property for the outdoor dining patio;
3. The applicant must resolve the issues with the dumpster placement on public property;
4. The applicant must submit a revised photometric plan and associated lighting plan, or obtain a variance from the Board of Zoning Appeals;
5. The applicant must revise the sign plan proposed to meet the requirements of the Sign Ordinance, or obtain a variance from the Board of Zoning appeals; and
6. The applicant must comply with the requests of all City Departments.

13.0 Sample Motion Language (*Final Site Plan & Design Review*)

Motion to recommend **APPROVAL** to the City Commission the Final Site Plan & Design Review for 720 N. Old Woodward – Vinewood Bistro – with the following conditions:

1. The Planning Board approves/disapproves the outdoor dining patio encroachment into the right-of-way;

2. The applicant must enter into a lease agreement for the use of public property for the outdoor dining patio;
3. The applicant must resolve the issues with the dumpster placement on public property;
4. The applicant must submit a revised photometric plan and associated lighting plan, or obtain a variance from the Board of Zoning Appeals;
5. The applicant must revise the sign plan proposed to meet the requirements of the Sign Ordinance, or obtain a variance from the Board of Zoning appeals; and
6. The applicant must comply with the requests of all City Departments.

OR

Motion to **POSTPONE** the Final Site Plan & Design Review for 720 N. Old Woodward – Vinewood Bistro – pending receipt of the following:

1. The Planning Board approves/disapproves the outdoor dining patio encroachment into the right-of-way;
2. The applicant must enter into a lease agreement for the use of public property for the outdoor dining patio;
3. The applicant must resolve the issues with the dumpster placement on public property;
4. The applicant must submit a revised photometric plan and associated lighting plan, or obtain a variance from the Board of Zoning Appeals;
5. The applicant must revise the sign plan proposed to meet the requirements of the Sign Ordinance, or obtain a variance from the Board of Zoning appeals; and
6. The applicant must comply with the requests of all City Departments.

OR

Motion to recommend the **DENIAL** to the City Commission the Final Site Plan & Design Review for 720 N. Old Woodward – Vinewood Bistro – for the following reasons:

1. _____
2. _____
3. _____

14.0 Sample Motion Language (*Special Land Use Permit*)

Motion to recommend **APPROVAL** to the City Commission the Special Land Use Permit for 720 N. Old Woodward – Vinewood Bistro – subject to the conditions of Final Site Plan & Design Review approval.

OR

Motion to **POSTPONE** the Special Land Use Permit for 720 N. Old Woodward – Vinewood Bistro – pending receipt of the following:

1. _____
2. _____
3. _____

OR

Motion to recommend **DENIAL** to the City Commission the Special Land Use Permit for 720 N. Old Woodward – Vinewood Bistro – for the following reasons:

1. _____
2. _____
3. _____

Zoning Compliance Summary Sheet
Final Site Plan Review
720 N. Old Woodward – Vinewood Bistro

Existing Site: 2-Story Commercial Building

Zoning: O2 (Office-Commercial), D2 (Downtown Overlay)

Land Use: Office/Commercial

Existing Land Use and Zoning of Adjacent Properties:

	North	South	East	West
Existing Land Use	Commercial	Office/Commercial	Public Parking	Multiple-Family Residential
Existing Zoning District	O2 (Office Commercial)	O2 (Office Commercial)	PP (Public Parking)	R6 (Multiple-Family Residential)
Overlay Zoning District	D2	D2	N/A	N/A

Land Area: Existing: 0.16 ac.
Proposed: 0.16 ac.

Dwelling Units: Existing: 0 units
Proposed: 0 units

Minimum Lot Area/Unit: Required: N/A
Proposed: N/A

Min. Floor Area /Unit: Required: N/A
Proposed: N/A

Max. Total Floor Area: Required: N/A
Proposed: N/A

Min. Open Space: Required: N/A
Proposed: N/A

Max. Lot Coverage: Required: N/A

	Proposed:	N/A
Front Setback:	Required:	0 ft.
	Proposed:	0 ft.
Side Setbacks	Required:	0 ft.
	Proposed:	0 ft.
Rear Setback:	Required:	10 ft.
	Proposed:	5 ft. (no changes proposed)
Min. Front+Rear Setback	Required:	N/A
	Proposed:	N/A
Max. Bldg. Height:	Permitted:	56 ft.
	Proposed:	37 ft. (no changes proposed)
Min. Eave Height:	Required:	34 ft.
	Proposed:	Existing
Floor-Ceiling Height:	Required:	N/A
	Proposed:	N/A
Front Entry:	Required:	N/A
	Proposed:	N/A
Absence of Bldg. Façade:	Required:	N/A
	Proposed:	N/A
Opening Width:	Required:	N/A
	Proposed:	N/A
Parking:	Required:	0 off-street spaces (Parking Assessment District)
	Proposed:	0 off- street spaces
Min. Parking Space Size:	Required:	180 sq. ft.
	Proposed:	N/A
Parking in Frontage:	Required:	N/A
	Proposed:	N/A
Loading Area:	Required:	None
	Proposed:	None

Screening:

Parking:	Required:	None
	Proposed:	None
Loading:	Required:	None
	Proposed:	None
Rooftop Mechanical:	Required:	Fully screened from public view
	Proposed:	Corrugated metal panels
		The applicant must submit specification sheets for all new RTU's and the proposed height of the screening material to ensure full screening from public view.
Elect. Transformer:	Required:	N/A
	Proposed:	N/A
Dumpster:	Required:	6 ft. masonry w/ wood gate
	Proposed:	6 ft. masonry, no gate
		The applicant must submit revised site plans and details with a fully screened dumpster enclosure with wood gates.

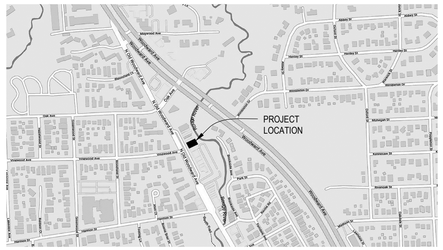

LOCATION MAP

N.T.S.

NORTH

R-6 ZONING DISTRICT ON OTHER SIDE OF N. OLD WOODWARD AVE.

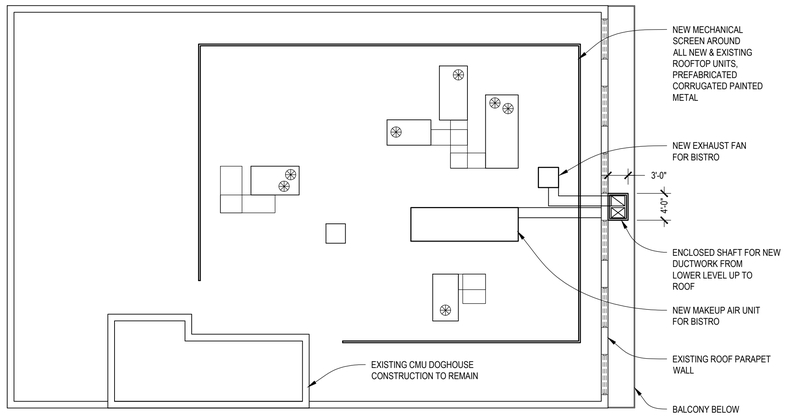

3 ROOF PLAN

scale: 3/32"" = 1'-0"

NORTH

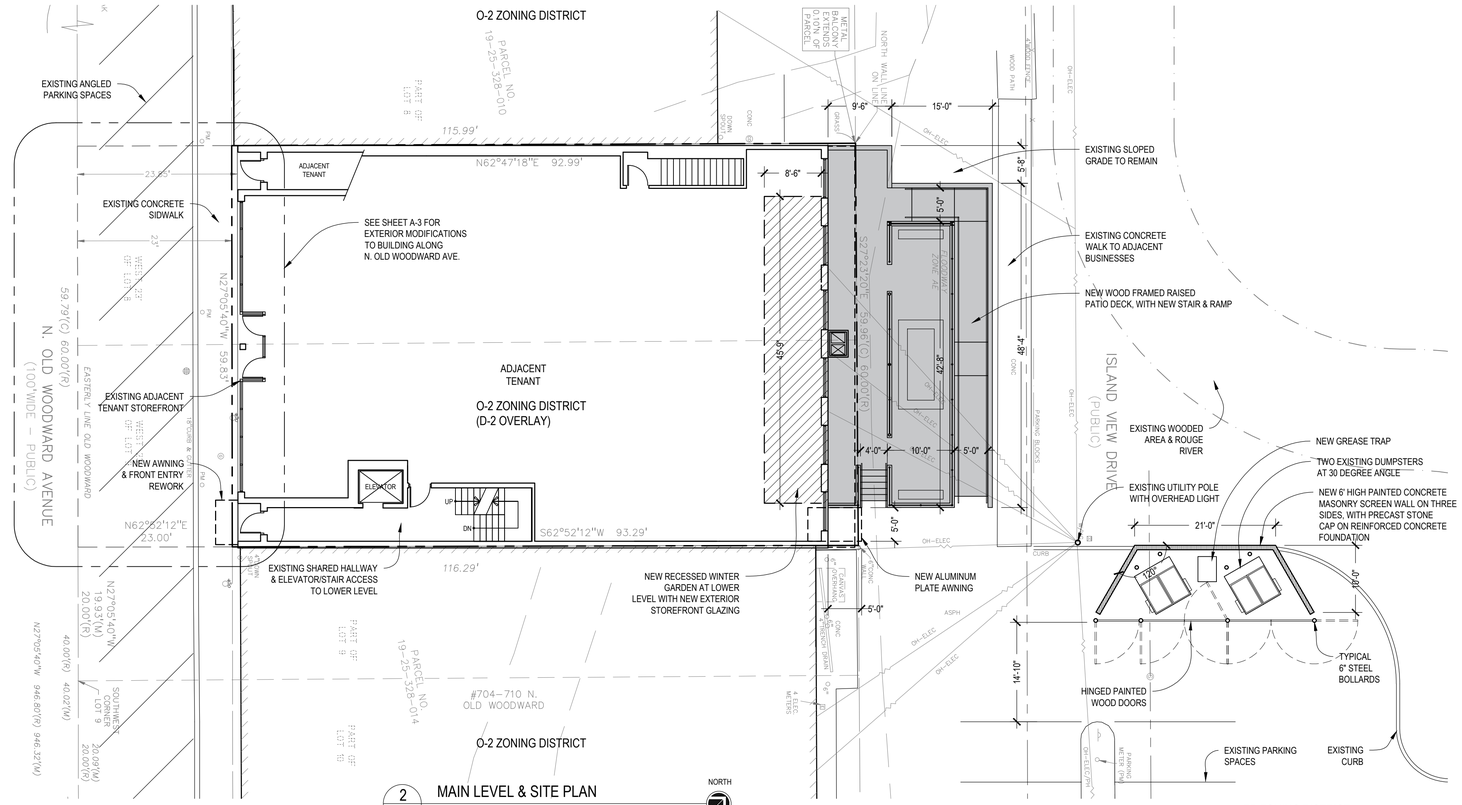

2 MAIN LEVEL & SITE PLAN

scale: 3/32" = 1'-0"

NORTH

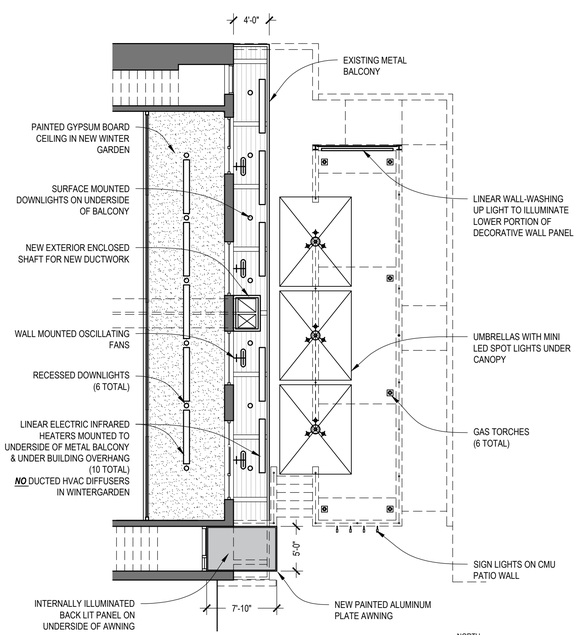

4 PATIO/WINTER GARDEN LIGHTING

scale: 1/8" = 1'-0"

NORTH

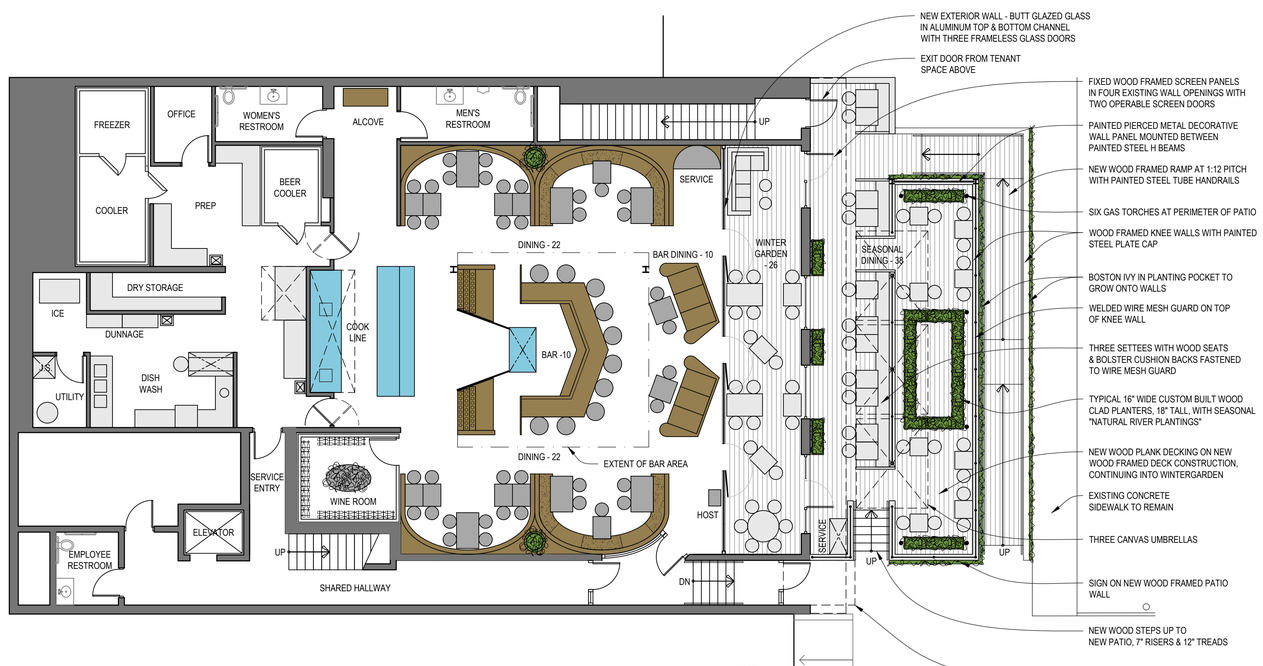

1 LOWER LEVEL FLOOR PLAN

scale: 1/8" = 1'-0"

NORTH

PROJECT INFORMATION:

ZONING	O-2, D-2 OVERLAY
CURRENT USE GROUP	B, BUSINESS
PROPOSED USE GROUP	A-2, RESTAURANT

PROJECT AREAS:

INTERIOR LOWER LEVEL =	3,372 SF
WINTER GARDEN =	435 SF
NEW EXTERIOR PATIO =	1,238 SF

SEATING CAPACITY

INTERIOR	
BAR	10
BAR DINING	10
DINING	44
TOTAL INTERIOR	*64*
EXTERIOR	
WINTER GARDEN	26
PATIO	38
TOTAL EXTERIOR	*64*

RONANDROMAN
architects et al.
275 E. Frank St. Birmingham MI 48009
o) 248.723.5790

Project:

THE VINEWOOD
NEW BISTRO IN AN EXISTING SPACE
720 N. OLD WOODWARD AVE., BIRMINGHAM, MI 48009

Seal:

Issue Date:

BISTRO SLUP	2/3/21
REVISION	4/6/21

Sheet Title:

FLOOR PLANS

Sheet Number:

A-1

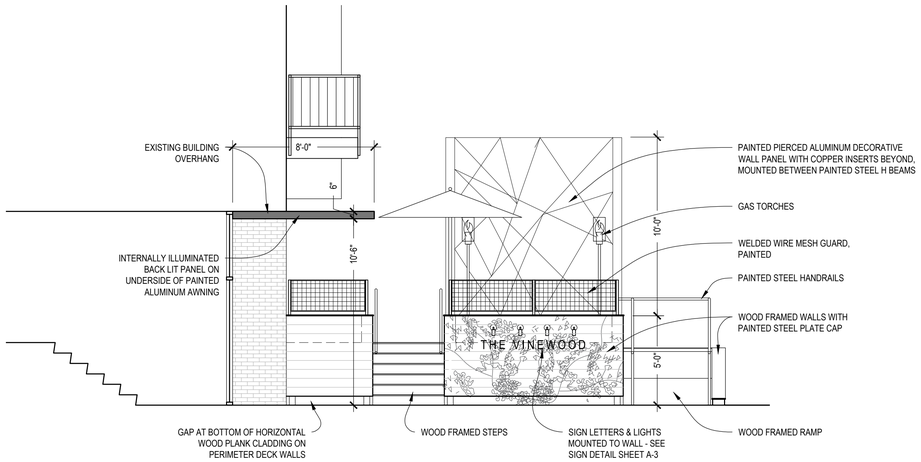

3 SIDE ELEVATION

scale: 1/4" = 1'-0"

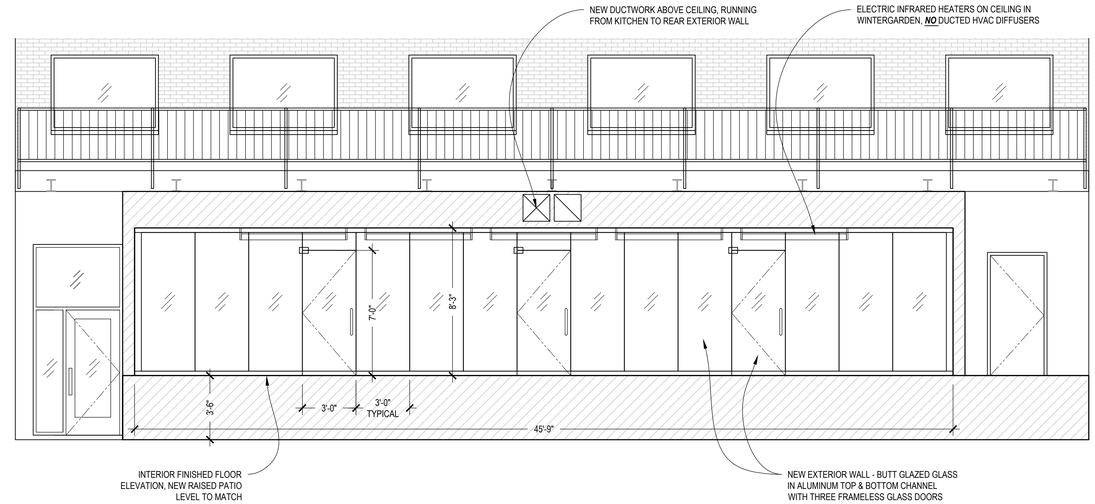

2 NEW WINTER GARDEN EXTERIOR WALL ELEVATION

scale: 1/4" = 1'-0"

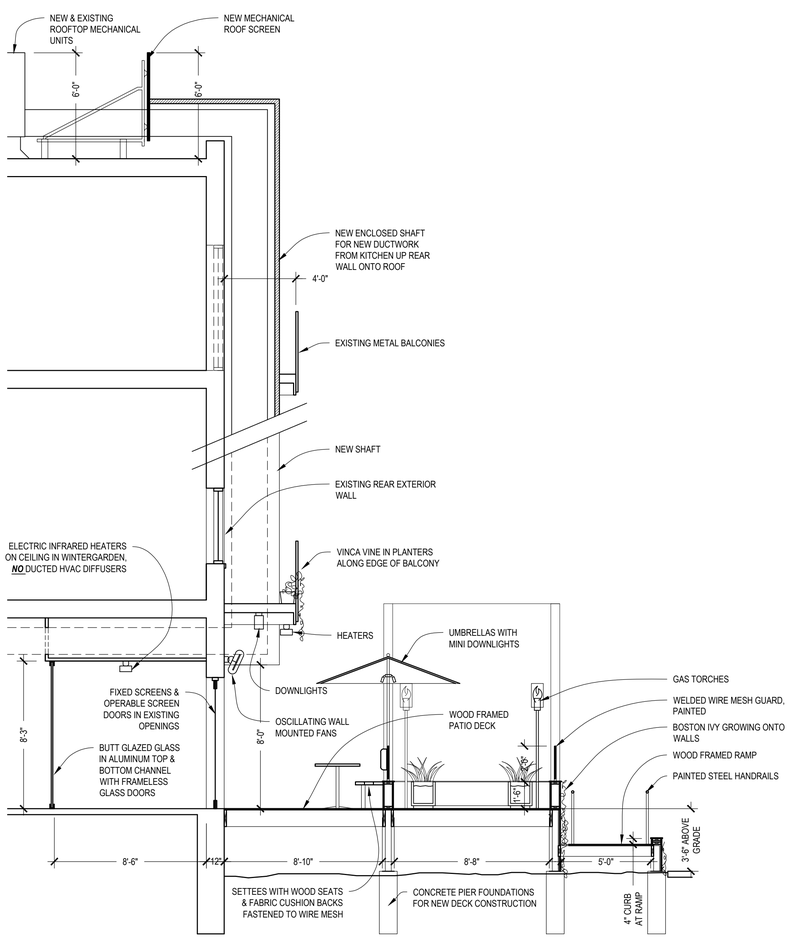

4 SECTION THRU NEW PATIO & WINTER GARDEN

scale: 1/4" = 1'-0"

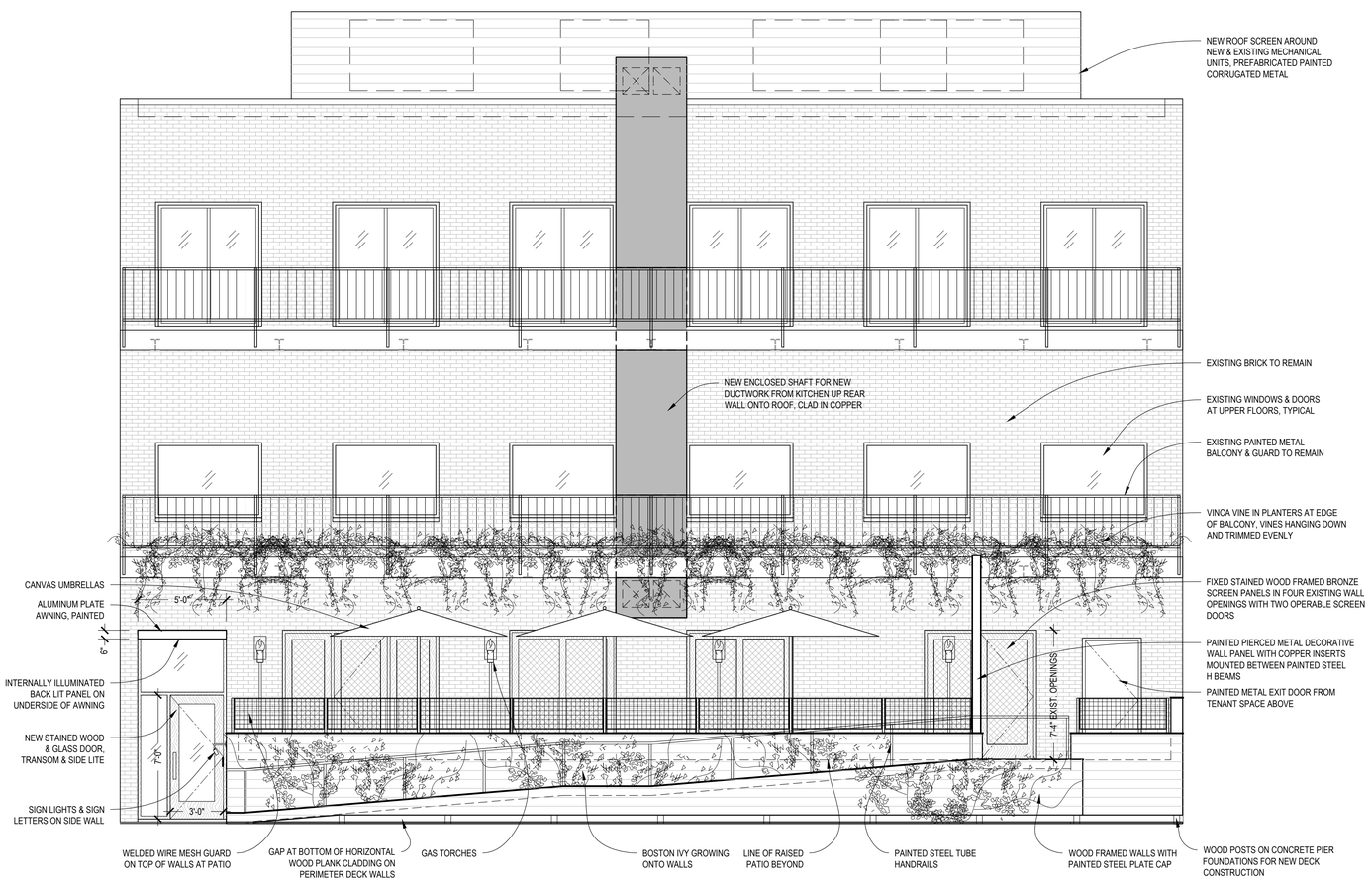

1 REAR ELEVATION (FACING ROUGE RIVER)

scale: 1/4" = 1'-0"

RONANDROMAN
architects et al.
275 E. Frank St. Birmingham MI 48009
o) 248.723.5790

Project:

THE VINEWOOD
NEW BISTRO IN AN EXISTING SPACE
720 N. OLD WOODWARD AVE., BIRMINGHAM, MI 48009

Seal:

Issue Date:

BISTRO SLUP	2/3/21
REVISION	4/6/21

Sheet Title:

EXTERIOR ELEVATIONS

Sheet Number:

A-2

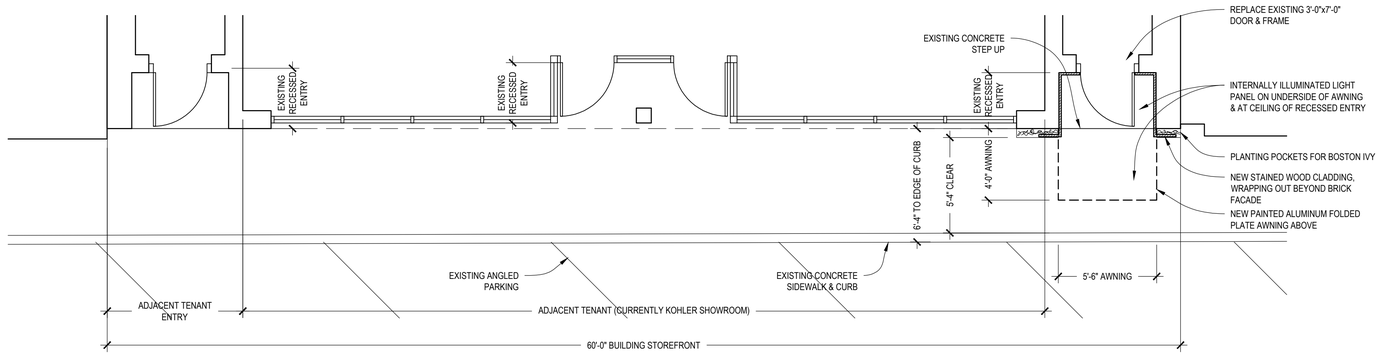

3 FRONT ENTRY PLAN

scale: 1/4" = 1'-0"

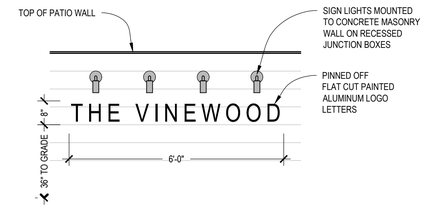

6 REAR SIGN ELEVATION

scale: 1/2" = 1'-0"

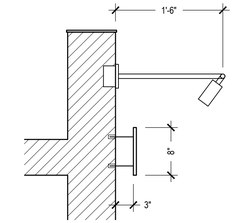

7 REAR SIGN SECTION

scale: 1" = 1'-0"

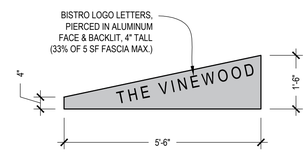

4 FRONT SIGN ELEVATION

scale: 1/2" = 1'-0"

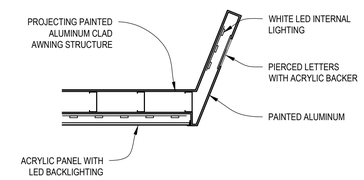

5 FRONT SIGN SECTION

scale: 1" = 1'-0"

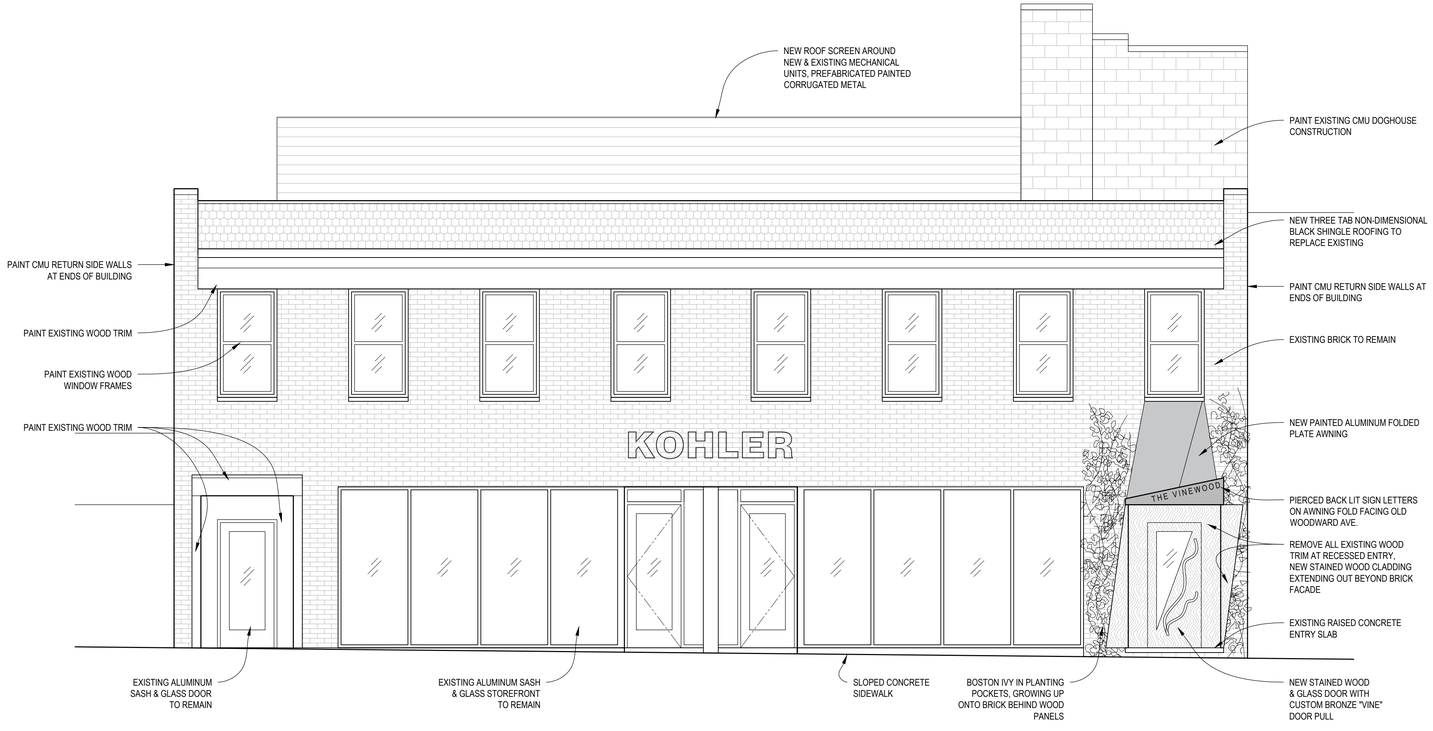

1 FRONT ELEVATION (FACING N.OLD WOODWARD AVE.)

scale: 1/4" = 1'-0"

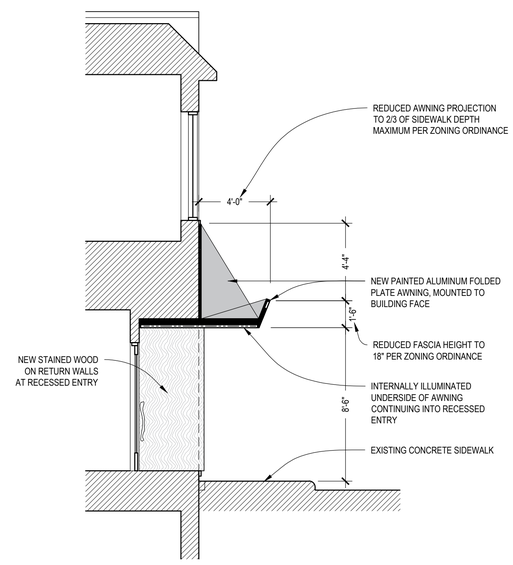

2 SECTION THRU ENTRY

scale: 1/4" = 1'-0"

RONANDROMAN
architects et al.
275 E. Frank St. Birmingham MI 48009
o) 248.723.5790

Project:

THE VINEWOOD
NEW BISTRO IN AN EXISTING SPACE
720 N. OLD WOODWARD AVE., BIRMINGHAM, MI 48009

Seal:

Issue Date:

BISTRO SLUP	2/3/21
REVISION	4/6/21

Sheet Title:

EXTERIOR ELEVATIONS

Sheet Number:

A-3

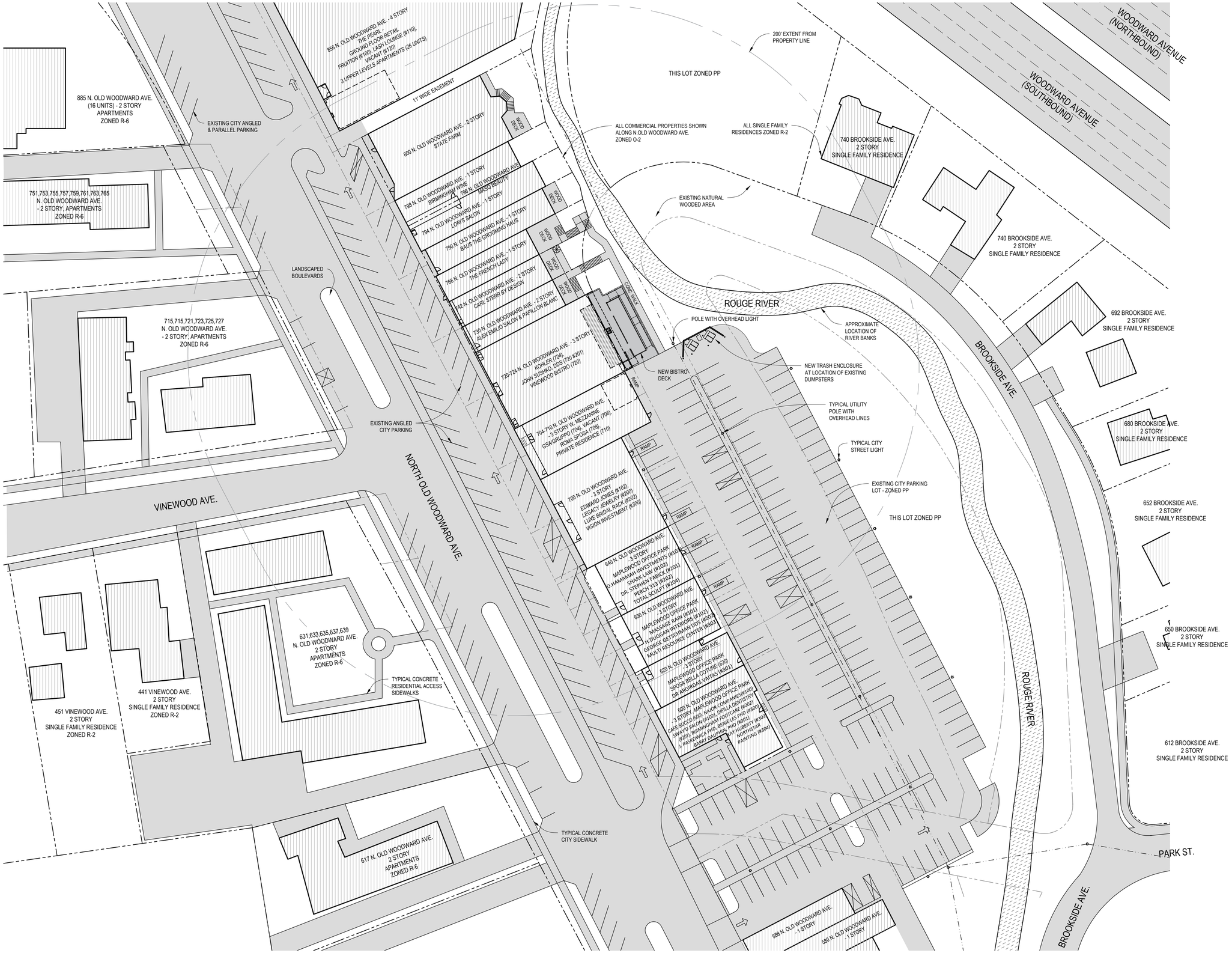

1 ADJACENT AREAS SITE PLAN

scale: 1"=30'

NORTH

RONANDROMAN
architects et al.
275 E. Frank St. Birmingham MI 48009
o) 248.723.5790

Project:

THE VINEWOOD
NEW BISTRO IN AN EXISTING SPACE
720 N. OLD WOODWARD AVE., BIRMINGHAM, MI 48009

Seal:

Issue Date:

BISTRO SLUP	2/3/21
REVISION	4/6/21

Sheet Title:

SURROUNDING PROPERTIES SITE PLAN

Sheet Number:

A-4

Schedule

Symbol	Label	Image	QTY	Manufacturer	Catalog Number	Description	Lamp	Number Lamps	Filename	Lumens per Lamp	LLF	Wattage	Distribution	Polar Plot	Notes
	A		7	Hydrel	PEPIN 3LED16 30K FL	PEPIN LED 30K 40? (4th GEN LED)	LED16 - 6W/40?FL/3K WW - 3X Nichia 219 w/Khatod Optic	1	PEPIN_3LED16_30K_FL.ies	Absolute	1	5.84	4 X 4	Max: 757cd	
	B		6	Lithonia Lighting	6JBK RD 30K 90CRI	6" Direct Wire LED Recessed Downlight, 3000K CCT, 120V	LED	1	6JBK_RD_30K_90CRI.ies	840	1	10.9	DIRECT, SC-0=1.22, SC-90=1.23	Max: 371cd	
	C		9	Hydrel	4620 LED WHTS3K MVOLT SP	5"DIA. X 8-1/8"H. 4620 SERIES ACCENT LED FIXTURE 6 COOL WHITE LEDS WITH TIGHT SPOT DISTRIBUTION TEMPERED CLEAR FLAT BOROSILICATE GLASS	6 COOL WHITE LEDS WITH TIGHT SPOT DISTRIBUTION	1	4620_LED_WHT53K_MVOLT_SP.ies	162	1	9.95	3 X 3	Max: 1046cd	THIS FIXTURE IS A COMPATIBLE SUBSTITUE FOR FOCUS INDUSTRIES UNDER UMBRELLA LIGHTS - HEADS TO BE AIMED DOWNWARDS, NOT OUTWARDS
	D		2	Hydrel	4750L 4FT 500LMF 30K MFL	4750L Linear LED Flood 4FT 500LMF 30K MFL		1	4750L_4FT_500LMF_30K_MFL.ies	2350	1	20.98	7 X 5	Max: 1408cd	THIS FIXTURE IS AIMED AT BASE OF DECORATIVE WALL PANEL, NOT UPWARDS
	E		4	B-K LIGHTING, INC.	NS-LED-e66-MFL-13, AR-LED-TR-e66-MFL-13, AR-LED-RM-e66-MFL-13, DS-LED-e66-MFL-13, RM-AR-LED-e66-MFL-13, SN-LED-e66-MFL-13, ST-LED-e66-MFL-13, SF-LED-e66-MFL-13, TF-LED-e66-MFL-13, WS-LED-e66-MFL-13, AW-LED-e66-MFL-13, SW-LED-e66-MFL-13, GD-LED-e66-MFL-13, GQ-LED-e66-MFL-13, EC-LED-e66-MFL-13, ED-LED-e66-MFL-13, SM-AR-LED-e66-MFL-13, PM-LED-e66-MFL-13, WM-LED-e66-MFL-13, UL-AR-LED-e66-MFL-13, HP2-LED-e66-MFL-13, CO2-LED-e66-MFL-13, VQ-LED-e66-MFL-13, VS-LED-e66-MFL-13	MACHINED CYLINDRICAL METAL HOUSING, 1 BLACK CIRCUIT BOARD WITH 3 LEDS, ONE CLEAR CONICAL PLASTIC OPTIC PER LED WITH FROSTED SURFACE OPPOSITE LED AND SEMI-HEMISPHERICAL RECESSED CENTER TOWARD LED, MOLDED BLACK PLASTIC OPTIC MOUNTING FRAME, CLEAR LINEAR-PRISMATIC FLAT GLASS LENS IN MACHINED CYLINDRICAL BLACK PAINTED METAL LENS FRAME. LENS PRISMS OUT AND VERTICAL.	THREE WHITE LIGHT EMITTING DIODES (LEDS), AIMED AT THE HORIZON.	3	LED-e66-MFL-13-ITL85924.IES	Absolute	1	6.95		Max: 949cd	THESE SIGN LIGHTS ARE DIRECTED TOWARDS WALL THAT SIGN IS MOUNTED ONTO
	F		130	Juno Lighting	SM2 FR SL412 27K 80CRI	DEEP CHANNEL FROSTED (1FT SECTION)	SL412 20FT 27K 80CRI (1 FT SECTION)	1	SM2_FR_SL412_27K_80CRI.ies	99	1	4.4	DIRECT, SC-0=1.26, SC-90=1.24	Max: 33cd	THIS FIXTURE IS USED TO SIMULATE CUSTOM INTERNALLY ILLUMINATED PANEL, WITH CONTINUOUS LED STRIPS AT 6" O.C.

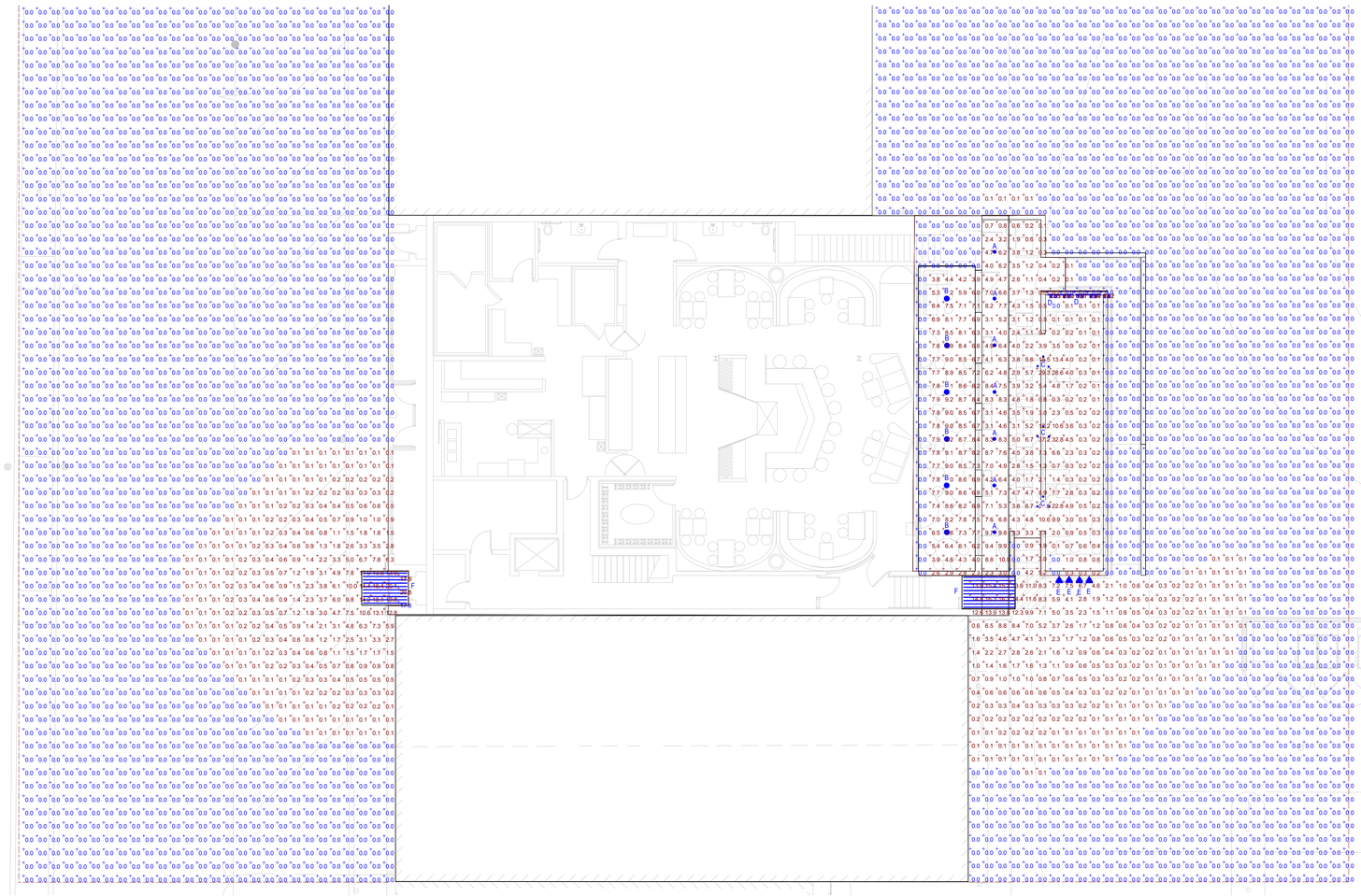

Plan View

VISUAL

Designer

Date
04/05/2021
Scale
Not to Scale
Drawing No.

Summary

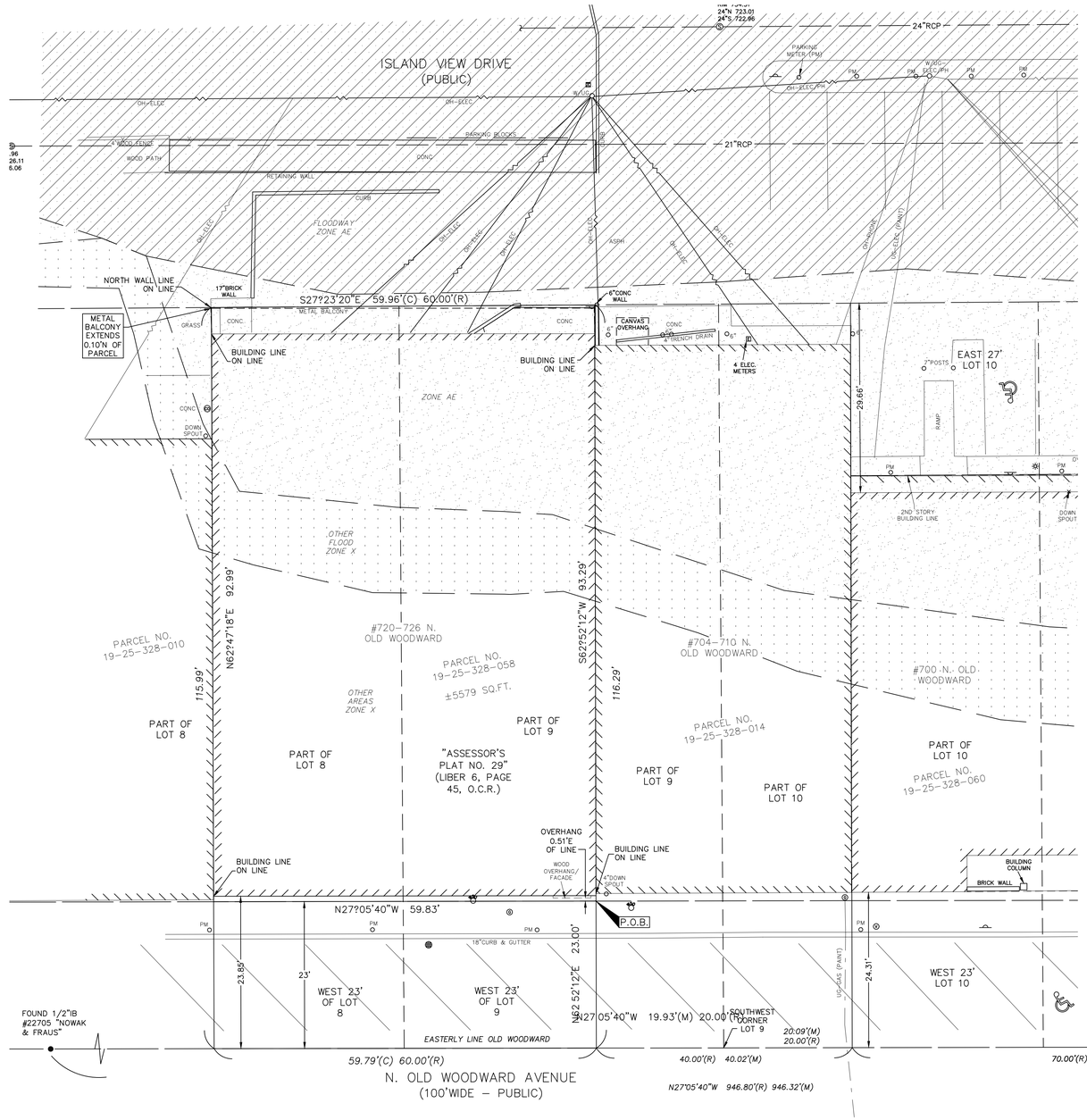

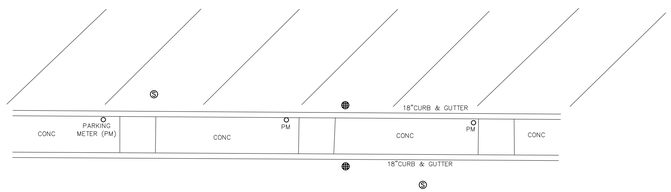

LEGEND

- IRON FOUND
- IRON SET
- NAIL FOUND
- NAIL & CAP SET
- BRASS PLUG SET
- MONUMENT FOUND
- MONUMENT SET
- SEC. CORNER FOUND
- R RECORDED
- M MEASURED
- C CALCULATED

EXISTING

- ELEC., PHONE OR CABLE TV O.H. LINE, POLE & GUY WIRE
- UNDERGROUND CABLE TV, CATV PEDESTAL
- TELEPHONE U.G. CABLE, PEDESTAL & MANHOLE
- ELECTRIC U.G. CABLE, MANHOLE, METER & HANDHOLE
- GAS MAIN, VALVE & GAS LINE MARKER
- WATERMAIN, HYD., GATE VALVE, TAPPING SLEEVE & VALVE
- SANITARY SEWER, CLEANOUT & MANHOLE
- STORM SEWER, CLEANOUT & MANHOLE
- COMBINED SEWER & MANHOLE
- CATCH BASIN
- WATER VALVE BOX/HYDRANT VALVE BOX, SERVICE SHUTOFF
- MAILBOX, TRANSFORMER, IRRIGATION CONTROL VALVE
- UNIDENTIFIED STRUCTURE
- FENCE
- GUARD RAIL
- STREET LIGHT
- SIGN
- CONC. — CONCRETE
- ASPH. — ASPHALT

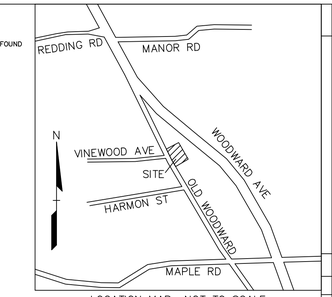

LOCATION MAP NOT TO SCALE

GRAPHIC SCALE

–10 0 5 10 20 40

(IN FEET)
1 inch = 10 ft.

LEGAL DESCRIPTION

(PER TITLE CONNECT LLC, COMMITMENT NO. TC13–60274, EFFECTIVE JUNE 22, 2015)

Land situated in the City of Birmingham, County of Oakland, State of Michigan, Described as follows:

The Northerly 30 feet of Lot 9 and Southerly 30 feet of Lot 8 except the West 23 feet deeded to the City of Birmingham for access drive for off–street parking, Assessor's Plat No. 29, a replat of Residence Park Subdivision, a resubdivision of Lots 25 to 27 inclusive, Lots 57 to 64 inclusive and parts of Ravine Road and Court included therein of Residence Park Subdivision, C.E. Jones Subdivision and part of Lot 88 and all of Lots 13, 14, 15, 53, 54, 55, 56, 57,87 and 89 of Oak Grove Addition, City of Birmingham, Oakland County, Michigan, according to the plat thereof as recorded in Liber 6, of Plats, Page 45, Oakland County Records.

Parcel No. 19–25–328–058
720–726 N. Old Woodward

LEGAL DESCRIPTION

(AS SURVEYED BY PROFESSIONAL ENGINEERING ASSOCIATES)

PARCEL NO. 19–25–328–058
Land Situated in the City of Birmingham in the County of Oakland in the State of MI

North 30 feet of Lot 9, EXCEPT the West 23 feet thereof and the South 30 feet of Lot 8, EXCEPT the West 23 feet thereof, Assessor's Plat No. 29, as recorded in Liber 6, Page 45 of Plats, Oakland County Records, said parcel being more particularly described as follows:

Commencing at the Southwest corner of Lot 9, Assessor's Plat No. 29, as recorded in Liber 6, Page 45 of Plats, Oakland County Records;
thence along the westerly line of said Lot 9, said line also being the easterly line of Old Woodward Avenue (100 feet wide), N27°05'40"W, 19.93 feet;
thence N62°52'12"E, 23.00 feet to the Point of Beginning;
thence along a line parallel to the easterly line of said Old Woodward Avenue (100 feet wide), N27°05'40"W, 59.83 feet to the extension of the northerly line of Building #720–726 N. Old Woodward;
thence along said extension and the northerly line thereof, N62°47'18"E, 92.99 feet;
thence S27°23'20"E, 59.96 feet to the extension of the southerly line of said Building;
thence along said extension and southerly line thereof, S62°52'12"W, 93.29 feet to the Point of Beginning.
Containing 5579 square feet of land, more or less.

SCHEDULE B EXCEPTIONS

(PER TITLE CONNECT LLC, COMMITMENT NO. TC13–60274, EFFECTIVE JUNE 22, 2015)

5 Rights of tenants under any unrecorded leases.

6 Subject to the Combined Storm/Sanitary Sewer Retention Treatment Basin Appurtenances Easement Agreement between the City of Birmingham and the Birmingham CSO Drainage District recorded December 7, 1994 in Liber 15134, Page 290, Oakland County Records. [Not plotted. Easement does not lie within the subject parcel.]

FLOODPLAIN:

By graphic plotting only, the subject parcel lies within Zone AE, Floodway Zone AE, Other Flood Areas Zone X and Other Areas – Zone X Per Flood Insurance Rate Map Number 26125C–0537F. Effective September 29, 2006)

SPECIAL FLOOD HAZARD AREAS SUBJECT TO INUNDATION BY THE 1% ANNUAL CHANCE FLOOD
The 1% annual chance flood (100 year flood), also known as the base flood, is the flood that has a 1% chance of being equaled or exceeded in any given year. The Special Flood Hazard Area is the area subject to flooding by the 1% annual chance flood. Areas of Special Flood Hazard include Zones A, AE, AH, AO, AR, A99, V and VE. The Base Flood Elevation is the water–surface elevation of the 1% annual chance flood.

ZONE AE – Base Flood Elevations determined.

FLOODWAY AREAS IN ZONE AE
The floodway is the channel of stream plus any adjacent floodplain areas that must be kept free of encroachment so that the 1% annual chance flood can be carried without substantial increases in flood heights.

OTHER FLOOD AREAS
ZONE X – Area of 0.2% annual chance flood; areas of 1% annual chance flood with average depths of less than 1 foot or with drainage areas less than 1 square mile; and areas protected by levees from 1% annual chance flood.

OTHER AREAS
ZONE X – Area to be determined outside of the 0.2% annual chance floodplain.

SURVEYOR'S CERTIFICATE:

To: Title Connect, LLC
Brian F. Najor
Woodridge Properties 720–726 N. Old Woodward LLC
Bank of Ann Arbor

This is to certify that this map or plat and the survey on which it is based were made in accordance with the "Minimum Standard Detail Requirements for ALTA/ACSM Land Title Surveys," jointly established and adopted by ALTA and NSPS in 2011, and includes Items 3, 4, 8 and 11(a) of Table A thereof. The field work was completed on July 6, 2015.

DAVID EDWIN COLE
PROFESSIONAL SURVEYOR
NO. 32334

David E. Cole, PS
Agent for Professional Engineering Associates, Inc.
MI. P.S. No. 32334

No.	BY	CHK	DESCRIPTION	DATE

REVISIONS

CAUTION!!
THE LOCATIONS AND ELEVATIONS OF EXISTING UNDERGROUND UTILITIES AS SHOWN ON THIS DRAWING ARE ONLY APPROXIMATE. NO GUARANTEE IS EITHER EXPRESSED OR IMPLIED AS TO THE COMPLETENESS OR ACCURACY THEREOF. THE CONTRACTOR SHALL BE EXCLUSIVELY RESPONSIBLE FOR DETERMINING THE EXACT UTILITY LOCATIONS AND ELEVATIONS PRIOR TO THE START OF CONSTRUCTION.

THIS DRAWING AND DESIGN ARE THE PROPERTY OF PROFESSIONAL ENGINEERING ASSOCIATES, INC. THEY ARE SUBMITTED ON THE CONDITION THAT THEY ARE NOT TO BE USED, REPRODUCED, OR COPIED, IN WHOLE OR IN PART, OR USED FOR FURNISHING INFORMATION TO OTHERS, WITHOUT THE PRIOR WRITTEN CONSENT OF PROFESSIONAL ENGINEERING ASSOCIATES, INC. ALL RIGHTS INCLUDING OF COPYRIGHT AND OTHERWISE ARE HEREBY SPECIFICALLY RESERVED. © 2012 PROFESSIONAL ENGINEERING ASSOCIATES, INC.

CONSTRUCTION CONTRACTOR AGREES THAT IN ACCORDANCE WITH GENERALLY ACCEPTED CONSTRUCTION PRACTICES, CONSTRUCTION CONTRACTOR WILL BE REQUIRED TO ASSUME SOLE AND COMPLETE RESPONSIBILITY FOR JOB SITE CONDITIONS DURING THE COURSE OF CONSTRUCTION OF THE PROJECT, INCLUDING SAFETY OF ALL PERSONS AND PROPERTY; THAT THIS REQUIREMENT SHALL BE MADE TO APPLY CONTINUOUSLY AND NOT BE LIMITED TO NORMAL WORKING HOURS. CONSTRUCTION CONTRACTOR FURTHER AGREES TO DEFEND, INDEMNIFY AND HOLD DESIGN PROFESSIONAL HARMLESS FROM ANY AND ALL LIABILITY, REAL OR ALLEGED, IN CONNECTION WITH THE PERFORMANCE OF WORK ON THIS PROJECT EXCEPTING LIABILITY ARISING FROM THE SOLE NEGLIGENCE OF THE DESIGN PROFESSIONAL.

3 FULL WORKING DAYS BEFORE YOU DIG CALL
811
Know what's below
Call before you dig
MISS DIG System, Inc.
1-800-482-7171 (TOLL FREE) www.missdig.net

PROFESSIONAL ENGINEERING ASSOCIATES
2430 Rochester Ct. Suite 100
Troy, MI 48083-1872
Phone: (248) 689-9090
Fax: (248) 689-1044
website: www.peainc.com

NAJOR COMPANIES
600 N. OLD WOODWARD, SUITE 100
BIRMINGHAM, MI 48009

ALTA/ACSM LAND TITLE SURVEY
720 N. OLD WOODWARD
PART OF THE SW 1/4 OF SECTION 25, T.2N., R.10E.,
CITY OF BIRMINGHAM, OAKLAND COUNTY, MICHIGAN

DES.	DN.	EH	SUR.	MS	P.M.	DEC

G:\WORK FILES from home\Vinewood\4 Engineered Drawings\Grd\13166 ALTA.dwg

ORIGINAL
ISSUE DATE: AUGUST 10, 2015

PEA JOB NO. 2015-166

SCALE: 1" = 10'

DRAWING NUMBER:
1

BENJAMIN MOORE "PERENNIAL" 405
PAINTED ALUMINUM CANOPY & AWNING,
DECORATIVE PIERCED PANEL

BENJAMIN MOORE "BLACK FOREST GREEN"
HC-187 - PAINTED METAL GUARD & HAND
RAILS, STEEL PLATE CAP

STAINED WOOD TO MATCH LIGHT GREEN
PAINT COLOR, AT FRONT ENTRY

STAINED WOOD TO MATCH DARK GREEN
PAINT COLOR, AT REAR DOORS

SUNBRELLA "GINKGO"
CANVAS UMBRELLAS

BENJAMIN MOORE "UNIVERSAL BLACK"
2118-10, EXISTING PAINTED
WOOD TRIM

EXISTING BRICK WALLS TO REMAIN

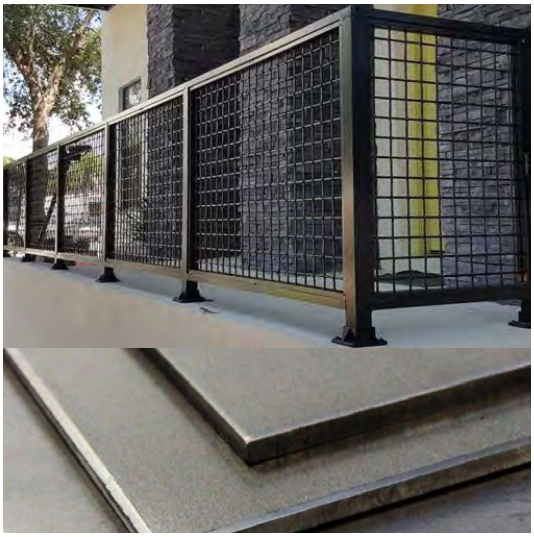

PAINTED METAL WALL CAP &
WIRE MESH GUARD RAIL

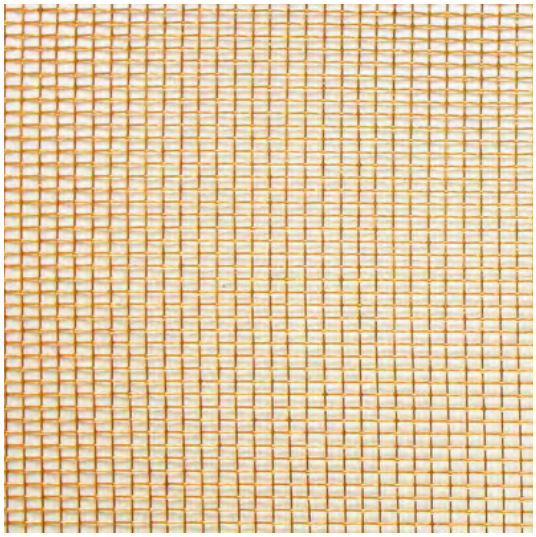

BRONZE SCREEN AT REAR DOORS

HORIZONTAL IPE WOOD PLANK CLADDING
ON PATIO KNEE WALLS, SEALED

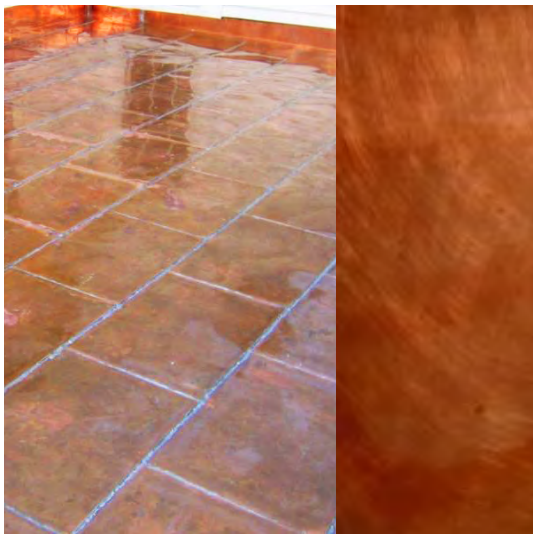

COPPER PANELS,
CLADDING AT DUCT SHAFT ENCLOSURE,
INSERTS AT DECORATIVE PIERCED WALL

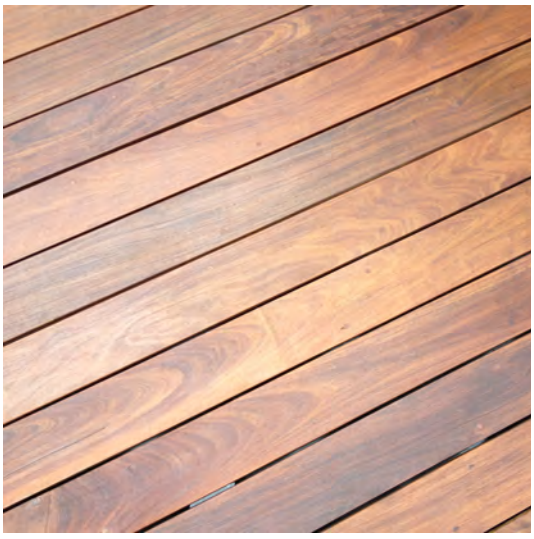

IPE WOOD DECKING ON PATIO &
WINTERGARDEN, SEALED

CLIMBINGBOSTON IVY
AT PATIO WALLS
& AT FRONT ENTRY

TRAILING VINCA VINE
IN PLANTERS ON REAR BALCONY

ASSORTED NATIVE GRASSES & SEASONAL FLOWERING RIVER BANK PLANTS,
IN PLANTERS ON PATIO DECK

GAS TORCHES AT PATIO

FRAMELESS GLASS DOORS & BUTT GLAZED
WINDOWS AT REAR WINTERGARDEN WALL

ILLUMINATED PANEL UNDERNEATH
FRONT AWNING & REAR CANOPY

TEMPEST™
GAS TORCHES AND LANTERNS

FIRE IN MOTION

Minimum Clearances To Combustibles

Floor: 2.5" combustible floor to bottom (base) of torch
Walls: 8" measured from glass surface
Ceiling: 26" measured from the torch top (glass frame) with or without the raincap. (Refer to the Owner's Manual for further details)

Gas Rating	NG	LP
Btus/Hr High	20,000	20,000
Btus/Hr Low	14,000	17,000

FOR YOUR SAFETY:
FOR OUTDOOR INSTALLATION ONLY!
Do not store or use gasoline or other flammable vapors and liquids in the vicinity of this or any other appliance.

WARNING:
Improper installation, adjustment, alteration, service or maintenance can cause injury or property damage. Refer to the owner's information manual provided with this appliance. For assistance or additional information consult a qualified installer, service agency or the gas supplier.

Electronic Ignition 24V Model
Install up to six torches on a single transformer and up to five transformers on one 120 volt 15 amp circuit. This can give you up to 30 torches on a single circuit!

Testing
Applicable portions of ANSI Z21.42a-2004 "Illuminating Appliances", CAN 1-2.15, CSA 4.96 U.S. (3rd Ed) "Outdoor Gas Fireplace", and AGA 8-96, "Requirement for Gas-Fired Decorative Illuminating Appliances for Outdoor Installation."

PICK THE IGNITION SYSTEM THAT BEST MEETS YOUR NEEDS

ELECTRONIC IGNITION 24V MODEL
The Electronic Ignition model can be used with a light switch, remote control, programmable timer or wired into a SmartHome system. Available in NG and LP.

PIEZO IGNITER MODEL
The manual light model works with a built-in Piezo Igniter and easy access control panel. Available in NG and LP.

This backyard patio features two Deck Post Tempest Torches.

Tempest Torch™

FEATURES YOU'RE GOING TO LOVE

- The Tempest Torch™ and Tempest Lantern™ can be installed in four different ways:
  - Ground Post
  - Deck Post
  - Pillar Mount
  - Wall Mount
- Automatic gas shutoff for added safety if the flame ever goes out.
- Removable rain cap included.
- Tempered glass panels are easy to remove for cleaning and service.
- The Tempest Torch™ features a durable stainless steel frame and burner.
- The Tempest Lantern™ features a durable, high temperature black powder coated frame & cap.
- Available in your choice of natural gas or propane.

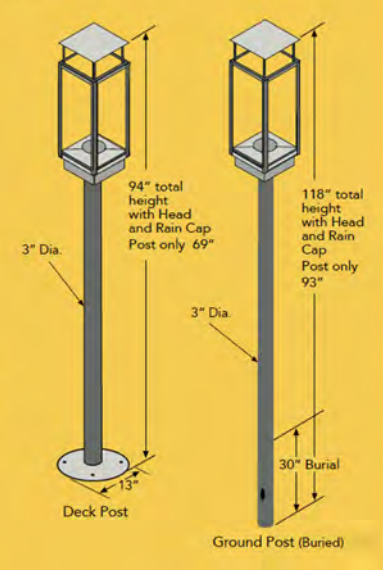

Fermob

Weight: : 23 kg
base : Liquorice steel central column
table top : Reinforced steel sheet: supporting cross-beams beneath
base : Cast iron (13 kg) - Liquorice
Stifled resonance for a more comfortable use
Thicker table top for optimal hold

VERBENA

4101 - CHAIR
Aluminium tube frame
Backrest and seat made from curved aluminium slats
Stacking: x 10 (stacked height: 48")

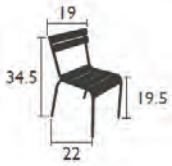

8 LB

4102 - ARMCHAIR
Aluminium tube frame
Backrest, seat and armrests made from curved aluminium slats
Stacking: x 4 (stacked height: 39")
Stacking: x 6 (stacked height: 42")
Stacking: x 8 (stacked height: 38")

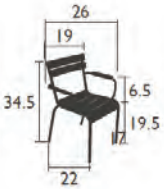

9 LB

ocean master classic

premium parasols

The Ocean Master Classic market style parasol is the culmination of durable engineering, stylish profiles and functional shade design. Manufactured to marine specifications, all Ocean Master parasols feature 100% replaceable parts for easy service and a 15/5-year warranty. Classic beauty. Classic TUUCI.

finish options

standard

polished aluminum

powder coat

textured bright white

sea shell white

espresso

ash grey

hammered bronze

jet black

shapes & sizes

square

ft.	/	m.
5.5'	/	1.65
6.5'	/	2.0
7.5'	/	2.25
*8.5'	/	2.6

octagon

ft.	/	m.
6.0'	/	1.8
7.5'	/	2.25
*9.0'	/	2.75
*10.5'	/	3.2
*11.5'	/	3.6

hexagon

ft.	/	m.
7.0'	/	2.15
*8.5'	/	2.6
*10.0'	/	3.0
*11.0'	/	3.4

rectangle

ft.	/	m.
5' x 8'	/	1.5 x 2.45
*6' x 9'	/	1.8 x 2.75

rectangle auto-scope

ft.	/	m.
*8' x 12'	/	2.45 x 3.65

finial options

venice aluminum

TUUCI®

features:

a. Manual Lift w/ Stainless Steel Security Pin
b. "Auto-Loc" Marine Pulley Lift System
c. "Easy Drive" Crank Lift System
d. Reinforced Strut Joints Construction
e. Armor-Wall Mast
f. Reinforced Pocket Construction

RIBBED PANELS

Economical and very strong with good spanning capability. Available in many styles including perforated and can be oriented vertically or horizontally.

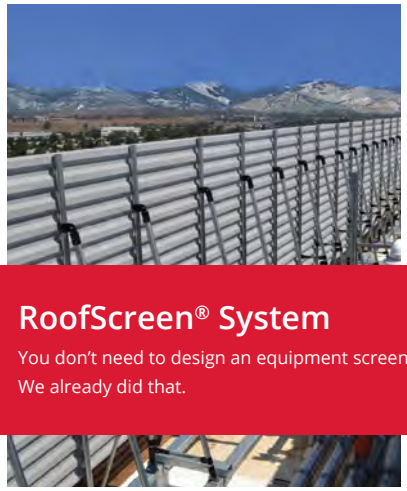

RoofScreen® System

You don't need to design an equipment screen. We already did that.

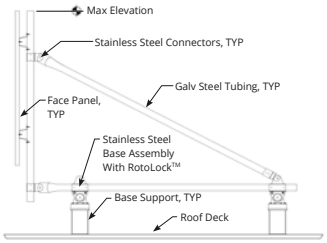

ROOF ATTACHMENTS YOU CAN TRUST

With the adjustable RotoLock™ feature, integral flashing design and a proven track record, you can have peace of mind using our attachment systems.

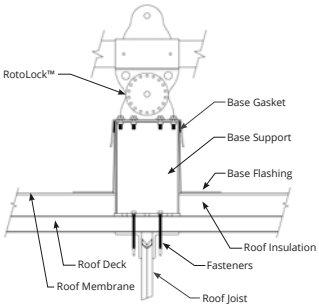

ENGINEERED

Full site-specific engineering and shop drawings, with engineer's stamp for any state.

WATERTIGHT

Our brilliantly designed attachments will work with any type of roofing system and will never leak.

WARRANTY

Rest easy knowing you're covered by a 20-year warranty. We don't fool around.

McNICHOLS®
Industrial & Architectural Hole Product Solutions Since 1952.

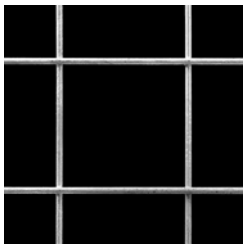

McNICHOLS® WIRE MESH

Square, Galvanized Steel, Hot Dipped, Welded - Untrimmed, 3" x 3" Mesh (Square), 2.8650" x 2.8650" Opening (Square), 0.135" Thick (10 Gauge) Wire Diameter, 91% Open Area

McNICHOLS® Wire Mesh, Square, Galvanized Steel, Hot Dipped, Mill Finish, Welded - Untrimmed, 3" x 3" Mesh (Square), 2.8650" x 2.8650" Opening (Square), 0.135" Thick (10 Gauge) Wire Diameter, 91% Open Area

ITEM 3403130041 - 48" x 120"

ITEM SPECIFICATIONS	
Item Number	3403130041
Product Line	Wire Mesh
Mesh Type	Square
Construction Type	Welded
Primary Material	Galvanized Steel (GV)
Alloy, Grade or Type	Hot Dipped (HD)
Material Finish	Mill Finish
Weave or Trim Type	Welded - Untrimmed
Mesh Size	3" x 3"
Opening Size	2.8650" x 2.8650"
Wire Diameter/Wire Gauge	0.135" Thick (10 Gauge)
Percent Open Area	91%
Weight	0.41 Lbs./Square Foot
Product Form	Sheet
Sizes (Width x Length)	48" x 120"

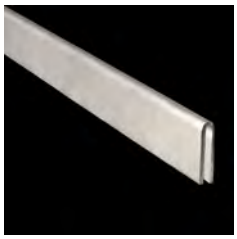

McNICHOLS® ACCESSORIES

U-Edging, Carbon Steel, Hot Rolled, 14 Gauge (.0747" Thick), Type 438 U-Edging (3/8" Opening x 1" Width)

McNICHOLS® Accessories, U-Edging, Carbon Steel, Hot Rolled, Mill Finish, 14 Gauge (.0747" Thick), Type 438 U-Edging (3/8" Opening x 1" Width), Used to Frame the Edges of Carbon Steel Perforated Metal, Expanded Metal and Wire Mesh

ITEM 4003801410 - 1" x 120"

ITEM SPECIFICATIONS	
Item Number	4003801410
Product Line	Accessories
Accessory Type	U-Edging
Primary Material	Carbon Steel (CS)
Alloy, Grade or Type	Hot Rolled (HR)
Material Finish	Mill Finish
Gauge/Thickness	14 Gauge (.0747" Thick)
Accessory Profile	Type 438 U-Edging (3/8" Opening x 1" Width)
Opening (Clear Space)	3/8"
Width	1"
Length	120"
Compatible With	Used to Frame the Edges of Carbon Steel Perforated Metal, Expanded Metal and Wire Mesh
Weight	0.56 Lbs./Linear Foot
Product Form	Piece
Sizes (Opening x Width x Length)	3/8" x 1" x 120" (Cut Lengths Available)

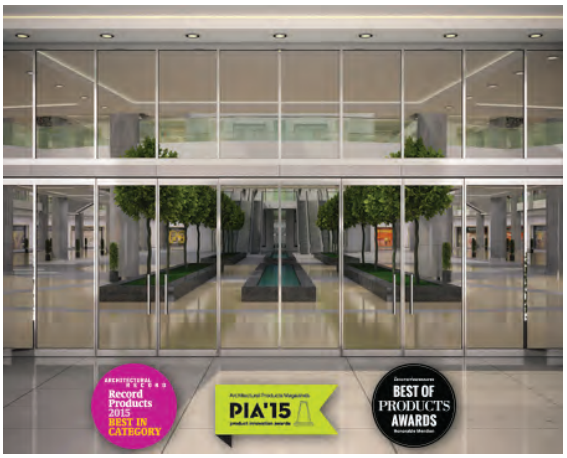

The CRL-U.S. Aluminum Entice® Series Entrance System was created to exceed demanding building code and energy conservation requirements while maintaining an elegant appearance. Entice has very slender vertical lines and the unique ability to support handle hardware on 1" (25 mm) insulating glass with a "floating on air" appearance, making Entice a perfect match for our equally elegant Blumcraft® Access Handles.

- 1-1/8" (29 mm) Ultra Narrow Vertical Stiles and Mullions With a System Depth of Only 2-1/2" (64 mm)
- Accommodates 1" (25 mm) Insulating Glass
- Complete Entrance System Including, Corners, Thresholds, Wall and Doorway Jambs, Vertical Mullions, and Fixed Lite Rails
- Header Adapter Integrates With USAL Storefronts and Curtain Walls
- Meets the requirements of AAMA SFM-1-14
- U-Factors as Low as 0.33
- Meets ASHRAE 90.1 Air Infiltration and Thermal Performance Requirements

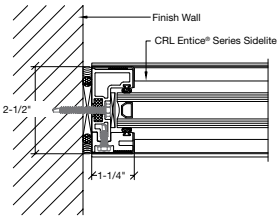

SIDELITE JAMB AT WALL

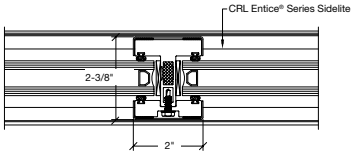

INTERMEDIATE VERTICAL MULLION

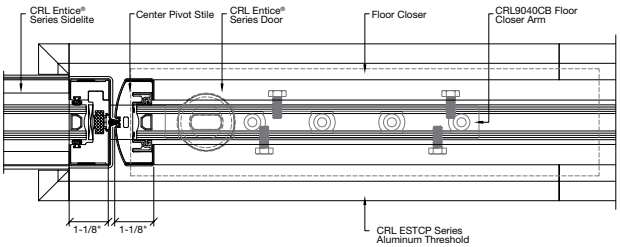

DOOR JAMB AT SIDELITE

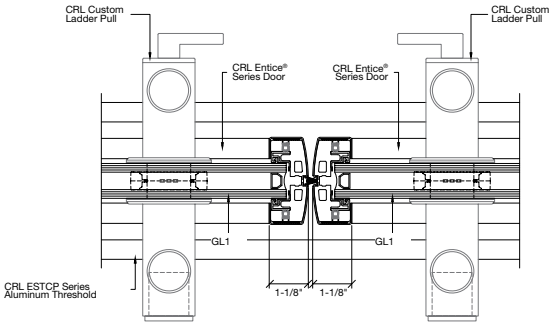

MEETING STILES

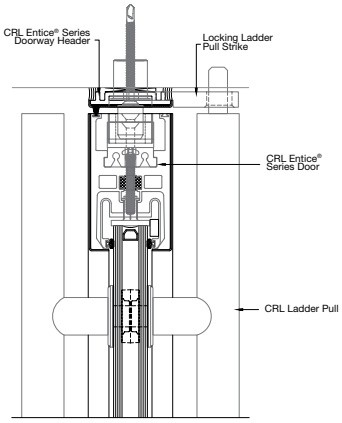

DOOR HEAD

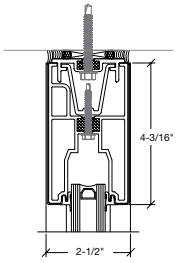

4" SIDELITE HEAD

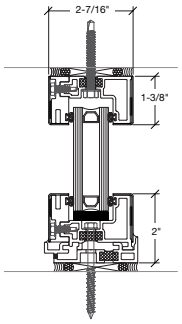

LOW PROFILE SIDELITE

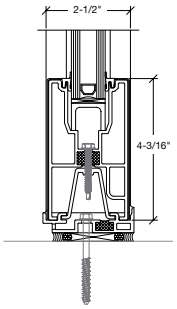

4" SIDELITE BOTTOM

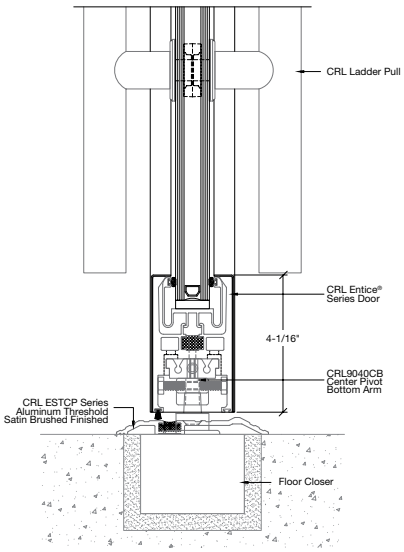

4" DOOR BOTTOM

NOT TO SCALE | For Specifications, Details, and Testing visit crl-arch.com/ENTICE

CRL PROJECT RESOURCES

ENERGY CODE TOOLS:

- NFRC Bid Reports
- NFRC Label Certificates
- Thermal Performance Glazing Selection Charts
- Area Weighting Calculations
- State Energy Commission Document Coordination

DRAFTING AND DESIGN SERVICES:

- Shop Drawings
- Fabrication Drawings
- 3D Modeling
- Engineering Services
- Project Management

Contact U.S. Aluminum Tech Sales for more information at **usalum@crlaurence.com**.

MATTHEWS FAN COMPANY

KAYE

FINISH AND BLADE OPTIONS		
SKU#	KC-XX (Model+Finish)	
NEW Finishes	Brushed Nickel	BN
	Matte Black	BK
	Polished Chrome	CR
	Textured Bronze	TB
	Gloss White	WH

shown in Matte Black

TECHNICAL SPECS	
Fan Weight	10.5 lbs
Voltage	110 or 220
Motor Type	AC
Oscillation	Yes
Fan Diameter	13 inches / 33 cm
Fan Height	13 inches / 33 cm
Fan Projection	17.5 inches / 44 cm
Ceiling Mount Overall Drop	17.5 inches / 44 cm
Recommended Mounting Height	Approximately 24 inches / 61 cm from ceiling
Fan Guard	Safety Cage
Blade Pitch	31°
Environment	Damp locations for all finishes Neither coastal, saltwater nor chlorine compatible
Ambience	Soothing White Noise
Safety Certification	ETL / CETL
Warranty	Limited Lifetime
NEW JAN 21, 2020 DOE MOTOR EFFICIENCY DATA	
RPM (Low / High)	1213 / 1445
CFM (Low / High)	868 / 1303
Watts (High)	47.68
CFM/Watt (High)	27.32
Blade Pitch	31°
STANDARD EQUIPMENT	
Safety cage	
Side-mounted wall junction box	

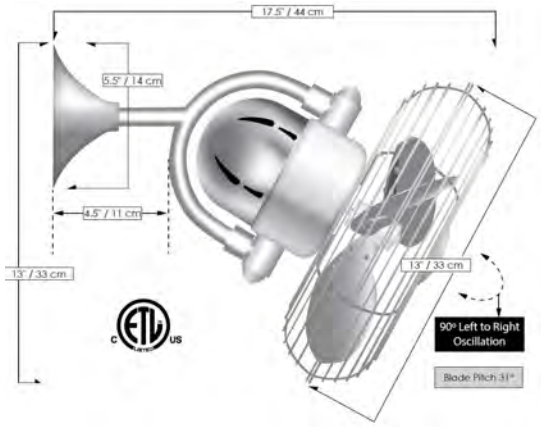

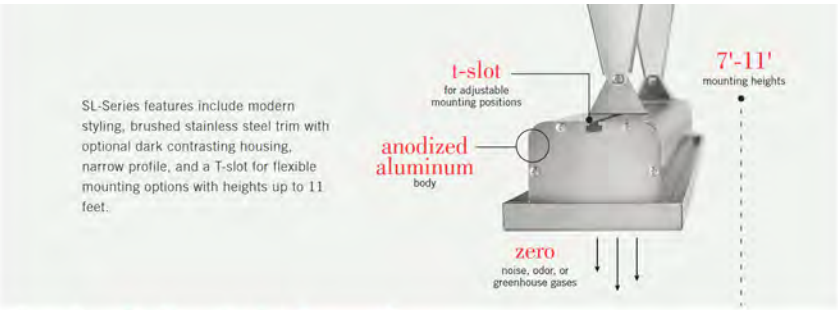

INFRATECH COMFORT

sl-series slimline single element heaters

With crisp, modern styling, an anodized aluminum housing and narrow profiles, Slimline heaters virtually disappear into the surrounding décor.

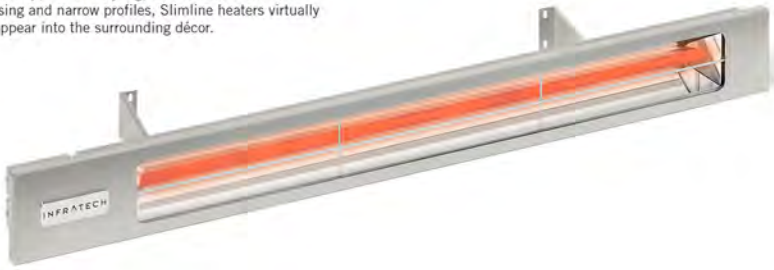

SILVER

ALL BLACK SLIMLINE SHADOW™

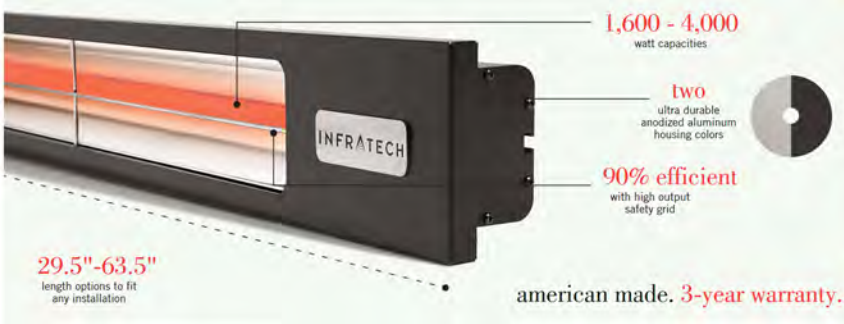

american made. 3-year warranty.

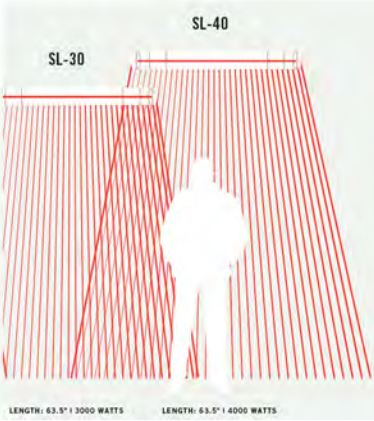

Note: Indoor or well-protected environments will generally exceed average coverage areas. Heaters can provide less than average coverage in extremely cold/windy conditions.

DELTA STAR - SIGN STAR STYLE 'C' LED

IP66 RATED

DATE:	PROJECT:	TYPE:

CATALOG NUMBER LOGIC:

**36" maximum stem length with Power Canopy option.*

***Designed for use with 12 VAC. LED transformer. Requires magnetic low voltage dimmer.*

****Please see Adjust-e-Lume photometry to determine desired intensity.*

*****Accommodates up to 2 lens/shielding media.*

CATALOG NUMBER LOGIC	
Example: SN - 30 - C - LED - e65 - SP - A7 - WHW - 12 - 11 - A - PC-TRe20	
MATERIAL	
Aluminum	
SERIES	
SN - Sign Star	
STEM LENGTH	
18" (Standard), 24", 30", 36", *42", or *48"	
STYLE	
C - Straight Mount	
SOURCE	
LED - with Integral Dimming Driver**	
LED TYPE	
e64 - 7W LED/2700K	e66 - 7W LED/4000K
e65 - 7W LED/3000K	e74 - 7W LED/Amber
OPTICS	
NSP - Narrow Spot (13°)	MFL - Medium Flood (23°)
SP - Spot (16°)	WFL - Wide Flood (31°)
ADJUST-E-LUME OUTPUT INTENSITY* **	
A9 (Standard), A8, A7, A6, A5, A4, A3, A2, A1	
FINISH	
Standard Finishes (BZP, BZW, BLP, BLW, WHP, WHW, SAP, VER)	
Premium Finish (ABP, AMG, AQW, BCM, BGE, BPP, CAP, CMG, CRI, CRM, HUG, MDS, NBP, OCP, RMG, SDS, SMG, TXF, WCP, WIR)	
(Also available in RAL Finishes. See submittal SUB-1439-00)	
LENS TYPE** **	
12 - Soft Focus	13 - Rectilinear
SHIELDING** **	
11 - Honeycomb Baffle	
CAP STYLE	
A - 45°	
B - 90°	
C - Flush	
D - 45° Less Weephole (Interior use only)	
E - 90° Less Weephole (Interior use only)	
F - 90° with Flush Lens	
OPTIONS	
PC-TRe20 - Power Canopy with TRe20 Electronic Transformer (105-300 VAC. 50/60 Hz. non-dimming)*	
UPM - Universal Power Module	

B-K LIGHTING | **MADE IN THE USA** | **559.438.5800 | INFO@BKLIGHTING.COM | BKLIGHTING.COM**

THIS DOCUMENT CONTAINS PROPRIETARY INFORMATION OF B-K LIGHTING, INC. AND ITS RECEIPT OR POSSESSION DOES NOT CONVEY ANY RIGHTS TO REPRODUCE, DISCLOSE ITS CONTENTS, OR TO MANUFACTURE, USE OR SELL ANYTHING IT MAY DESCRIBE. REPRODUCTION, DISCLOSURE OR USE WITHOUT SPECIFIC WRITTEN AUTHORIZATION OF B-K LIGHTING, INC. IS STRICTLY FORBIDDEN.

12/02/2020 SKU-746
SUB-2270-00

CANOPY - SIDE VIEW

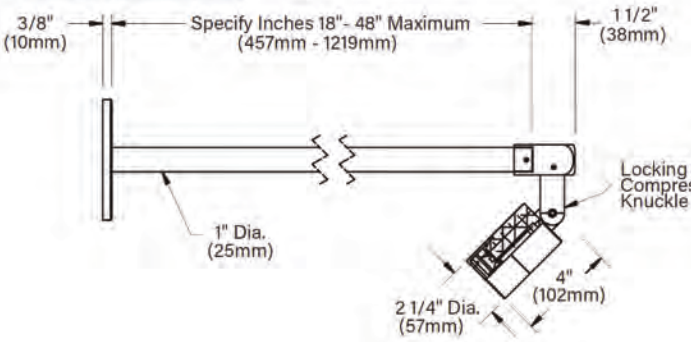

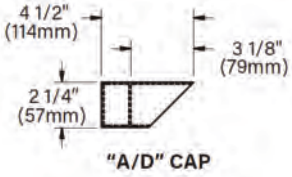

STANDARD FINISHES

Brass LED Umbrella Lights

By Focus Industries

THREE HEADED FIXTURE
UNDER EACH UMBRELLA

LUMENS
LIGHT AND LIVING
Call Us 877.445.4486

Product Options

Finish: Brass , Brass Acid Rust , Brass Acid Verde , Black Acid Treatment

Details

- 3 brass heads, each with independent 360? swivel
- Heavy duty formed brass bracket
- Adjustable from 1 1/4" to 1 3/4" pole sizes
- High impact clear tempered convex glass lens
- High temperature red silicone O-ring
- Life expectancy up to 25,000 hours for LED light
- Black 10 foot SPT-1W lead wire from fixture
- Connects to a 12v landscaping electrical system
- Transformer is necessary but not included
- ETL Listed Damp
- Warranty: 3 years
- Made In USA

Dimensions

Head: Height 3.5", Diameter 1.4"
Mounting Bracket: Diameter 2.5"

Lighting

- 4.5 Watt (160 Lumens) 12 Volt Integrated LED: Lifespan: 50000 hours

Additional Details

Product URL:
https://www.lumens.com/brass-led-umbrella-lights-by-focus-industries-FOCP97822.html
Rating: ETL Listed Damp

Notes:

Product ID: FOCP97822

Prepared by:

Prepared for:
Project:
Room:
Placement:
Approval:

Created April 7th, 2021

PEPIN LED

12V LED16

SURFACE MOUNTED LIGHTS
UNDER EXISTING BALCONY

LED

CATALOG NUMBER	
NOTES	
TYPE	

Specifications

D:	2-1/4" (58mm)
H:	4-17/32" (116mm) w/C1
	5-17/32" (135mm) w/C2
	7-11/32" (187mm) w/C3
	5-9/32" (135mm) w/C4

*See mounting detail for additional dimensions.

Weight	up to 5 lbs (2.3kg)

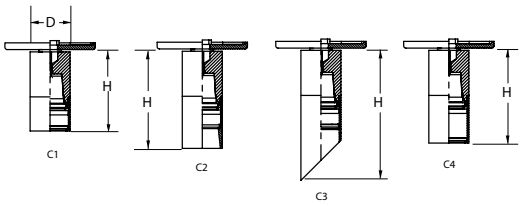

Suitable For Wet Locations

DESCRIPTION

The Pepin series is a nonadjustable down light suitable for ceiling mounting to provide accent or general lighting. Wet Location, Indoor/Outdoor rated, machined from billet Aluminum, Stainless Steel Hardware, Optically Clear heat strengthen borosilicate glass and Powder coated with a super durable TGIC powder coat finish, this fixture is designed to withstand the test of time. Designed with a wide range input voltage (11Vac - 14Vac) giving a nearly constant light output to combat Voltage drop, yet is dimmable using most standard Low Voltage Magnetic dimmers. LED units and Optics are replaceable. This fixture requires a remote 12Vac Transformer, purchased separately, to function.

ORDERING INFORMATION

EXAMPLE: PEPIN 3LED16 30K 12 FL CN5 IHL C4 LP DBL

PEPIN	3LED16		12			
Series*	**Source***	**Color Temperature***	**Voltage***	**Distribution***	**Mounting Accessories***	**Mounting Stems**
PEPIN	3LED16 LED 3up Round	27K 30K 40K 50K	12 [1]	NSP Narrow Spot NFL Narrow Flood FL Flood	CN4 Rectangular canopy CN5 Round 5" canopy DCDM Two part canopy	S__ Straight Stems Avail. in 3" and 6"-36" in 6" Increments

Options [2]

Internal Louver
- IHL Honeycomb Louver

Internal Accessory
- L1 Prismatic Lens
- L2 Linear Spread Lens
- L3 Softening Lens

Internal Filters
- FA Amber
- FG Green
- FGD Green Dichroic
- FLB Light Blue
- FM Mercury Vapor
- FMB Medium Blue
- FMBD Medium Blue Dichroic
- FR Red
- FRD Red Dichroic

External Caps*
- C1 Short Flush
- C2 Recessed Lens
- C3 45º Angle Cut
- C4 Long Flush

Finish*
- BL Black Textured
- BRS Bronze Smooth
- BRT Bronze Textured
- DBL Black Smooth
- DDB Designer Bronze
- DNA Natural Aluminum
- NBS Natural Bronze Smooth
- VET Verde Textured
- WH White
- CF Custom Finish

MOUNTING DETAIL

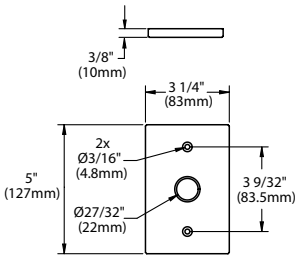

CN4

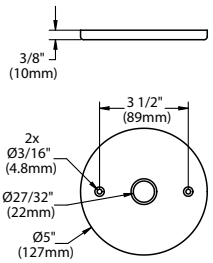

CN5

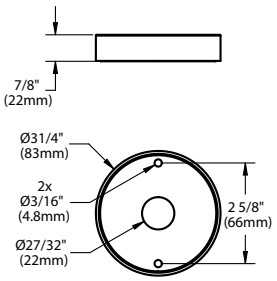

DCDM

*Required Fields

Notes:

1 Remote Transformer Required.

2 Up to 3 Optional items can be specified.

NOTE: Hydrel Reserves The Right To Modify Specification Without Notice. Any dimension on this sheet is to be assumed as a reference dimension: "Used for information purposes only. It does not govern manufacturing or inspection requirements." (ANSI Y14.5-1973)

HYDREL

One Lithonia Way • Conyers, GA 30012
Phone: (800) 705-7378 • www.hydrel.com

©2014-2019 Acuity Brands Lighting, Inc.

Rev. 04/17/19
PEPIN_LED

Catalog Number	
Notes	
Type	

FEATURES & SPECIFICATIONS

INTENDED USE — The OneUp™ recessed direct-wire LED downlights includes integrated junction box, trim, pre-installed non-metallic push-in connectors, and wago connectors in one package. The OneUp is the most economical means to create a well lit environment with exceptional energy efficiency and near zero maintenance.

CONSTRUCTION — Spun steel, round baffle trim. Integrated galvanized steel junction box with captive door for easy access. Suitable for daisy chaining (pulling wires). Available in 3000K color temperature LEDs.

OPTICS — Round baffle recesses optical system into the ceiling to prevent glare and provide a traditional look. Diffused lens provides even light distribution for general illumination, equivalent to 65W incandescent flood lamp. Wide flood beam angle at >90°. CRI >90. Maintains at least 70% light output for 50,000 hours.

INSTALLATION — Tool-less installation. Secure trim retention with two side-mounted spring clips for easy installation in plaster, sheet rock, or plywood ceilings. Two non-metallic push-in connectors and three wago connectors pre-installed. Rated for Type IC installations. Maximum of 4 No. 12AWG through branch circuit conductor suitable for 90°C permitted in box. Ground wire provided.

ELECTRICAL SYSTEM — LED module with high-efficiency on board driver. Dimming down to 10%. For compatible dimmers, refer to: Compatible dimmers Chart.

Actual wattage may differ by +/-5% when operating at 120V +/-10%.

LISTINGS — ETL certified to US and Canadian safety standards. California T24 compliant. WSEC ASTEM E283 for Air-Tight rated with gasket or caulking between fixture trim and ceiling. ENERGY STAR® certified. Wet location listed.

WARRANTY — 5-year limited warranty. Complete warranty terms located at: www.acuitybrands.com/CustomerResources/Terms_and_conditions.aspx

Note: Actual performance may differ as a result of end-user environment and application. All values are design or typical values, measured under laboratory conditions at 25 °C. Specifications subject to change without notice.

RECESSED LIGHTS IN WINTERGARDEN CEILING

Direct-Wire LED Recessed Downlight

6JBK RD

IC
Remodel

Specifications

Aperture:	4-3/4" (119.7)
Overlap Trim:	7-1/4" (184.6)
Height:	5" (127.9)
Ceiling Opening:	6-1/2" (165)
Min Ceiling Thickness:	1/2" (12.7)
Max Ceiling Thickness:	1-1/2" (38.1)

All dimensions are inches (millimeters).

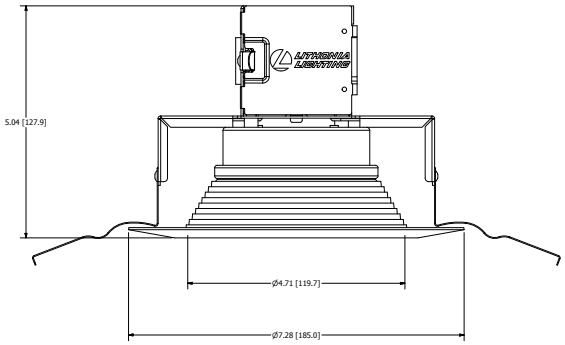

ORDERING INFORMATION For shortest lead times, configure product using **standard options (shown in bold).**

Example: 6JBK RD 30K 90CRI MW

Series	Shape	CCT/Watts/Lumens[1]	CRI	Finish
6JBK	**RD** Round	**30K** 3000K/10.9W/850L	**90CRI** 90 CRI	**MW** Matte White

Notes

1 Total System Delivered Lumens.

Superior Performance and Quality of Light

Juno FlexConnect™ LED luminaires offer superb lighting performance, producing up to 450 lumens per foot of brilliant white light in CCTs of 2200K, 2700K, 3000K, 3500K, and 4000K.

CONTINUOUS LED STRIP LIGHTS AT 6" O.C. IN CUSTOM INTERNALLY ILLUMINATED BOXES UNDER AWNINGS

Onboard Current Regulation – Consistent light output is maintained across the length of the run utilizing current regulators every 6-inches; unlike traditional LED tape that uses resistors which results in voltage drop and light degradation.

Embedded Connectors – Patent pending, embedded connectors allow Juno FlexConnect to be field-cut in 6-inch increments and reconnected in the field to another strip, electrical feed or connector.

Indoor
(SL Series, Damp Location)
- 2W/ft. (225 lm/ft.)
- 4W/ft. (425 lm/ft.)
- 12 LEDS per foot

Indoor/Outdoor
(SLW Series, IP67 Rated)
- 2W/ft. (220 lm/ft.)
- 4W/ft. (450 lm/ft.)
- 12 or 24 LEDS per foot

Patent Pending Optical Pigment

The proprietary optical pigment utilized in Juno FlexConnect luminaires is truly unique. This UV-stable pigment maintains color throughout the life of the product and corrects color shift that regularly occurs with other encapsulated strips. CCT color points are maintained within a 3-step MacAdam ellipse, providing the ability to accurately match other architectural lighting within a space. Excellent color rendition is achieved with standard CRI of 80 minimum and CRI of 95 available in the 2700K and 3000K versions. No other flexible linear-lighting system can compare in color and performance to these exceptional luminaires.

HYDREL

CATALOG NUMBER

NOTES

TYPE

4750L STATIC WHITE

Linear

Design2Ship

AT BASE OF DECORATIVE WALL PANEL

Specifications

Weight:	4' 17.5lbs
	2' 12.5lbs

HIGHLIGHTS

- The The 4750L delivers industry leading durability, performance and lumen output
- Superior water resistance IP67 with Hydrel "Flow-Thru" technology, water flows around the independently sealed integral driver module and sealed LED module
- Aiming integrity with a fully adjustable and rugged knuckle design using Taper-Lock technology
- Long life in the most demanding environments with low copper content housing materials, stainless steel fasteners, and durable powder coat finish options for Coastal Regions and Natatoriums
- 3G vibration rated per ANCI C136.31

5 YEAR warranty

IP67

DIMENSIONS

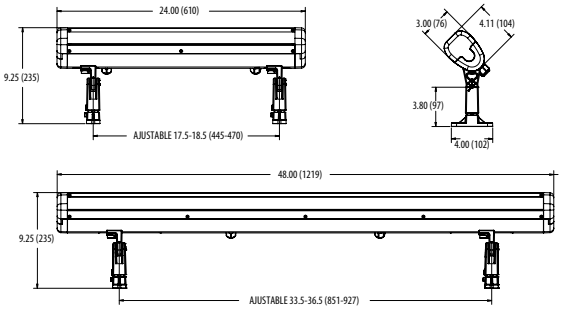

LUMEN PACKAGES

	VNSP	NSP	MFL	WFL	WWD
Delivered Lumens	6491	6646	7200	7286	6592
Watts	64	64	64	64	64
LPW	102	104	113	114	103
Peak Candela	7650	5961	4242	2683	3998

Note: Information based on 4000K @ 2000LMF on 4FT fixture

AIMING DETAILS

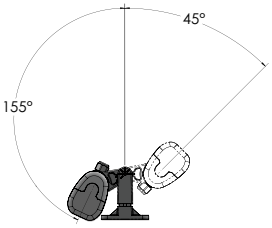

KM

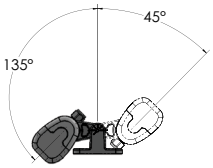

KMS

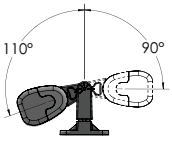

KM90

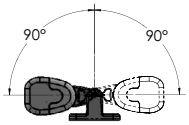

KMS90

STANDARD DISTRIBUTION

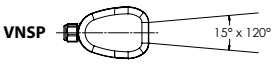

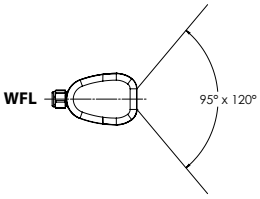

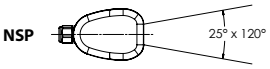

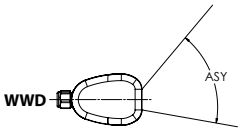

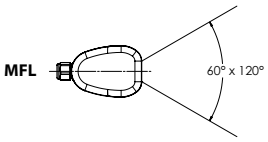

SPECIFICATION SHEET

PART NAME:	**HEATSTRIP RESTAURANT**
DESCRIPTION:	High intensity electric radiant heater
PART No:	THH3200AUM
POWER:	3200 Watts (11000BTU)
VOLTAGE:	208 volts @ 50 - 60Hz
CURRENT:	15 Amps
DIMENSIONS:	70 x 6.5 x 2”
WEIGHT:	22 lbs
CONNECTION:	Gangbox
APPROVALS:	CSA/UL E321448
PROTECTION RATING:	IP55 From water ingress from all directions
MOUNTING OPTIONS:	Suitable for ceiling, wall, beam, fixed umbrella and recess mounting. Also available with drop down poles or suspension kit.

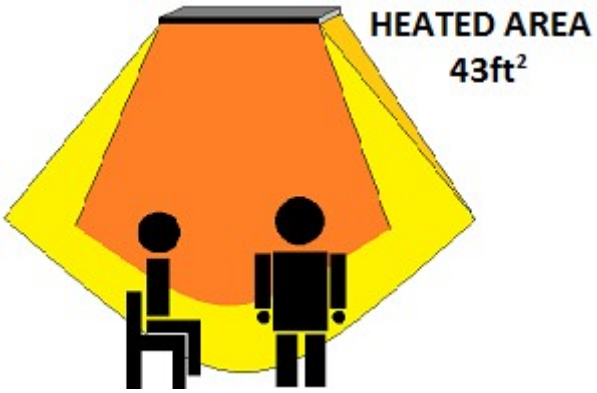

HEATED AREA	
INDOOR PROTECTED	86 ft^2 (6m2)
OUTDOOR ENCLOSED	69 ft^2(4.8m2)
OUTDOOR EXPOSED	57 ft^2 (4m2)

MOUNTING HEIGHT:

MINIMUM	82” (2.1m)
OPTIMUM	90 to 105” (2.3 to 2.7m)

Use drop down kit or suspension kit if higher

Note: See the Product Manual for more detail

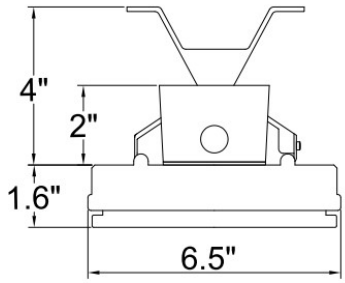

END VIEW

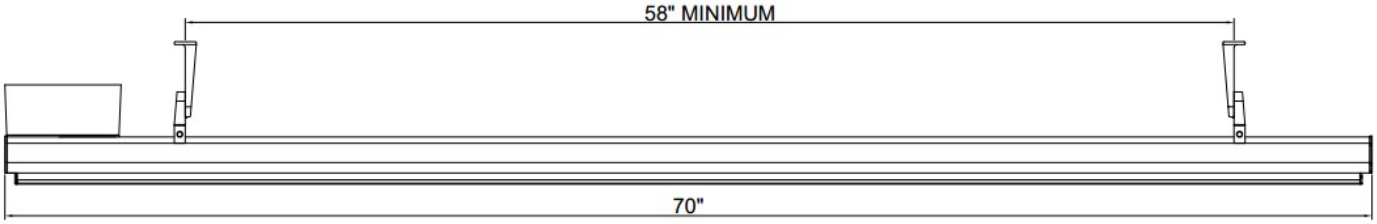

Heatstrip USA LLC.
1-877-222-0063 (Toll Free)
www.heatstripusa.com
info@heatstripusa.com

4275 Executive Square
#200
La Jolla, CA, 92037

616 Corporate Way,
Suite 2-5771,
Valley Cottage, NY 10989

HEATSTRIP USA

FAN #5 EA3-D.750-G18-MPU - HEATER (MUA)
1. DIRECT GAS FIRED HEATED MAKE UP AIR UNIT WITH 18" BLOWER AND 18" BURNER.
2. INTAKE HOOD WITH EZ FILTERS
3. DOWN DISCHARGE - AIR FLOW RIGHT -> LEFT
4. COOLING INTERLOCK RELAY. 24VAC COIL. 120V CONTACTS. LOCKS OUT BURNER CIRCUIT WHEN AC IS ENERGIZED.
5. MOTORIZED BACK DRAFT DAMPER 30" X 30" FOR SIZE 3 STANDARD & MODULAR HEATER UNITS W/EXTENDED SHAFT, STANDARD GALVANIZED CONSTRUCTION, 3/4" REAR FLANGE, LOW LEAKAGE, NFBUF-S ACTUATOR INCLUDED
6. LOW FIRE START. ALLOWS THE BURNER CIRCUIT TO ENERGIZE WHEN THE MODULATION CONTROL IS IN A LOW FIRE POSITION.
7. GAS PRESSURE GAUGE, 0-35", 2.5" DIAMETER, 1/4" THREAD SIZE
8. GAS PRESSURE GAUGE, -5 TO +15 INCHES WC., 2.5" DIAMETER, 1/4" THREAD SIZE
9. 15 TON, 3 CIRCUIT (5/5/5) MODULAR PACKAGED COOLING OPTION FOR SIZE 3 DF/EH MODULAR PACKAGED UNIT. INCLUDES CONDENSER, DX COIL, FILTER/DRYER KIT, HARD START KIT, THERMAL EXPANSION VALVE, R410A REFRIGERANT, AND REFRIGERANT PIPING. (5,400 TO 7,000 CFM) NOT BUILT WITH OPPOSITE SIDE CONTROLS OR OPPOSITE AIRFLOW DIRECTION. CONDENSERS REQUIRE SEPARATE 208V, 3 PHASE POWER SUPPLY UNLESS ORDERED WITH SINGLE POINT CONNECTION. COIL = 3EZ1002B
10. DOWNTURN PLENUM FOR SIZE 3 COOLING COIL MODULE - REQUIRED FOR DOWN DISCHARGE COOLING COIL APPLICATIONS
11. DX COOLING INTAKE AIR THERMOSTAT AND RELAYS MOUNTED IN UNIT - SET POINT FOR THERMOSTAT SHOULD BE 85°F.
12. SEPARATE 120VAC WIRING PACKAGE FOR MAKE-UP AIR UNITS. OPTION MUST BE SELECTED WHEN MOUNTING VFD IN PREWIRE PANEL OR WITH DCV PACKAGE. PROVIDES SEPARATE 120VAC INPUT TO SUPPLY FAN. THIS 120V SIGNAL MUST BE RUN BY ELECTRICIAN FROM DCV TO MUA SWITCH.
13. SUPPORT SHELL FOR SIZE 3 MODULAR PACKAGE UNIT FOR THIRD CONDENSER. INCLUDES CONTROL VESTIBULE. INCLUDES CONDENSER SUPPORTS. DOES NOT INCLUDE RETURN AIR OR INLET AIR DAMPER.

*NOTE: SUPPLY DUCT MUST BE INSTALLED TO MEET SMACNA STANDARDS. A MINIMUM STRAIGHT DUCT LENGTH MUST BE MAINTAINED DOWNSTREAM OF UNIT DISCHARGE AS OUTLINED IN AMCA PUBLICATION 201. DO NOT RELY ON UNIT TO SUPPORT DUCT IN ANY WAY. FAILURE TO PROPERLY SIZE DUCTWORK MAY CAUSE SYSTEM EFFECTS AND REDUCE PERFORMANCE OF THE EQUIPMENT. SUGGESTED STRAIGHT DUCT SIZE IS 24" x 24"

NEW MAKE UP AIR UNIT ON ROOF

SUPPLY SIDE HEATER INFORMATION:

WINTER TEMPERATURE = 7°F. TEMP. RISE = 80°F.
BTUs CALCULATED OFF ACTUAL AIR DENSITY
OUTPUT BTUs AT ALTITUDE OF 0.0 ft. = 585138
INPUT BTUs AT ALTITUDE OF 0.0 ft. = 636019
OUTPUT BTUs AT ALTITUDE OF 938 ft. = 565574
INPUT BTUs AT ALTITUDE OF 938 ft. = 614755

Typical Drain Trap Install

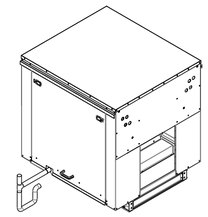

Recommended Cooling Coil Drain Trap Configuration

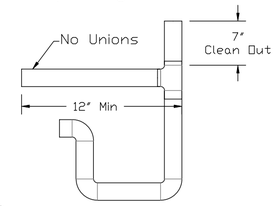

Notes:
1) 1" diameter PVC Pipe only
2) Use only low profile couplings
3) Add clean out as shown

KTECH™
www.mucklerktech.com

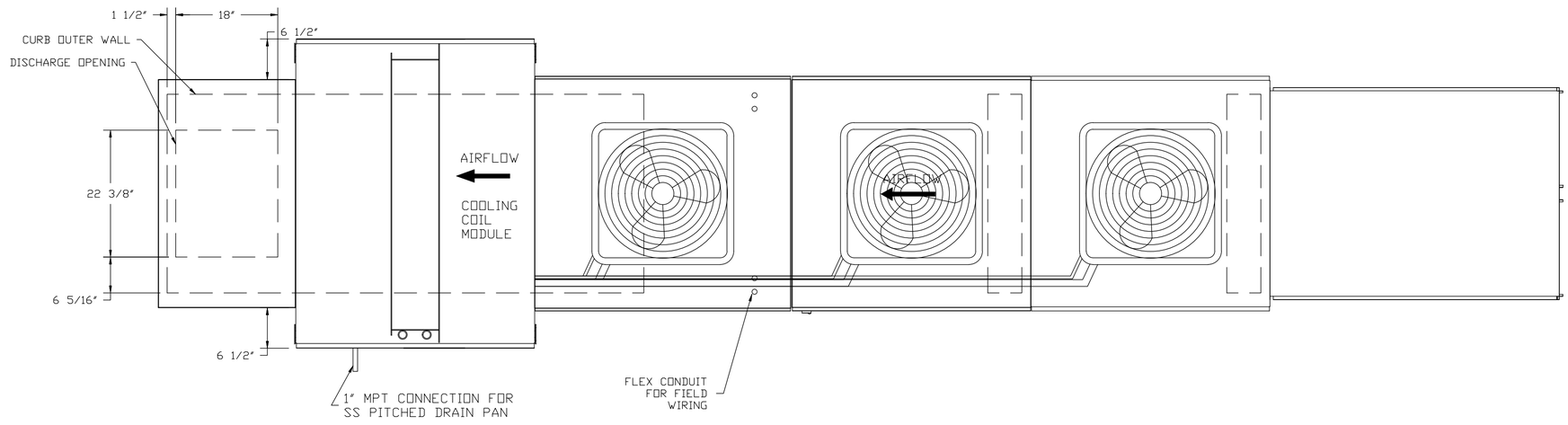

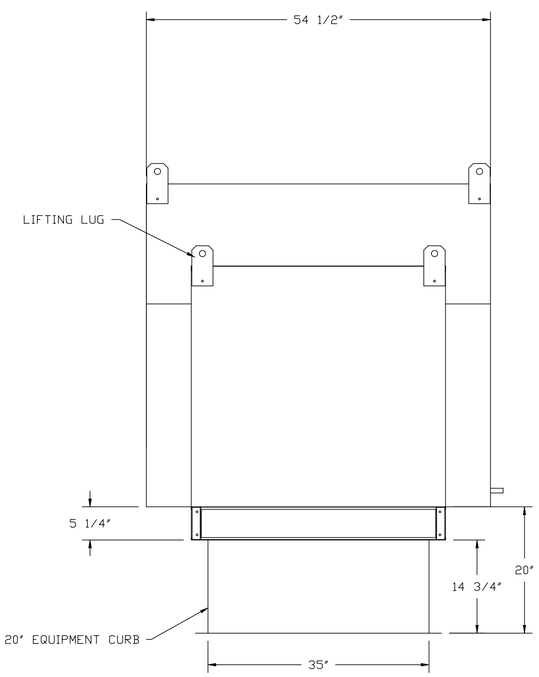

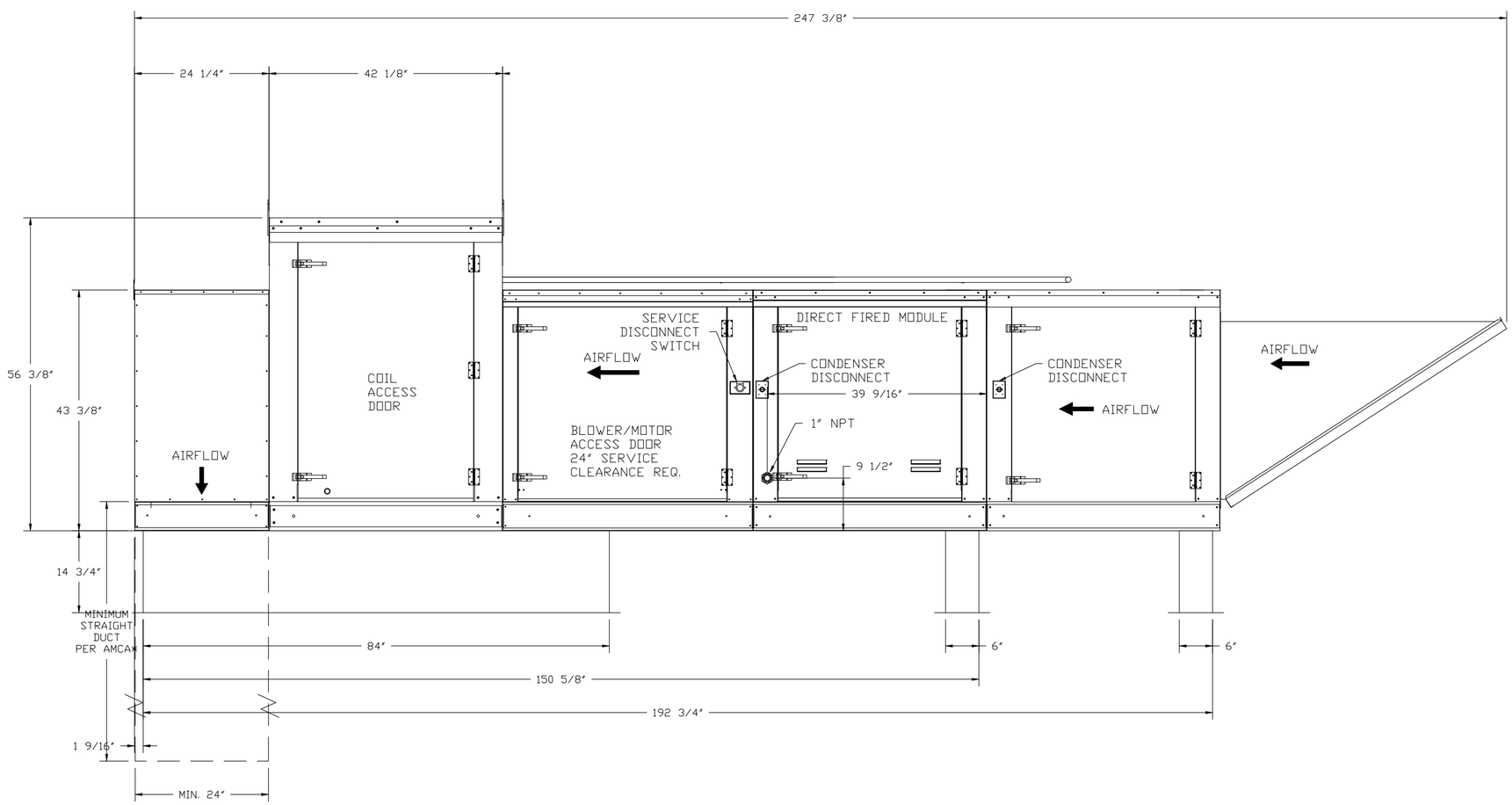

FAN #1 BDU15K - EXHAUST FAN

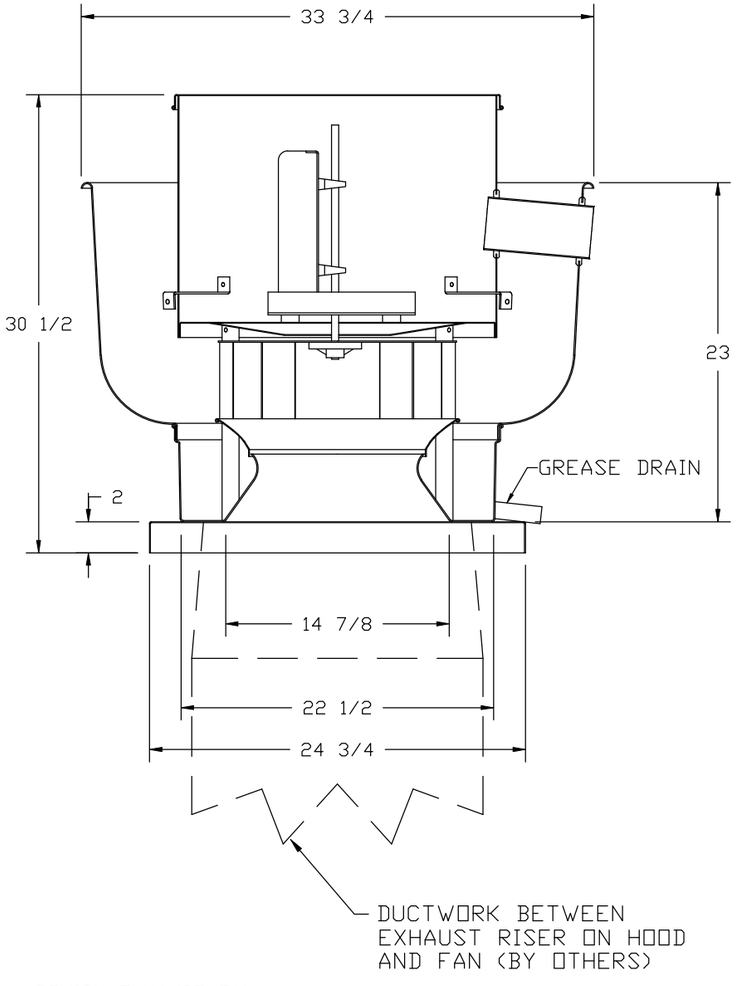

NEW EXHAUST FAN
ON ROOF

FEATURES:

- ROOF MOUNTED FANS
- RESTAURANT MODEL
- UL705 AND UL762 AND ULC-S645
- AMCA SOUND AND AIR CERTIFIED
- WIRING FROM MOTOR TO DISCONNECT SWITCH
- WEATHERPROOF DISCONNECT
- HIGH HEAT OPERATION 300°F (149°C)
- GREASE CLASSIFICATION TESTING

NORMAL TEMPERATURE TEST
EXHAUST FAN MUST OPERATE CONTINUOUSLY WHILE EXHAUSTING AIR AT 300°F (149°C) UNTIL ALL FAN PARTS HAVE REACHED THERMAL EQUILIBRIUM, AND WITHOUT ANY DETERIORATING EFFECTS TO THE FAN WHICH WOULD CAUSE UNSAFE OPERATION.

ABNORMAL FLARE-UP TEST
EXHAUST FAN MUST OPERATE CONTINUOUSLY WHILE EXHAUSTING BURNING GREASE VAPORS AT 600°F (316°C) FOR A PERIOD OF 15 MINUTES WITHOUT THE FAN BECOMING DAMAGED TO ANY EXTENT THAT COULD CAUSE AN UNSAFE CONDITION.

OPTIONS

GREASE BOX.

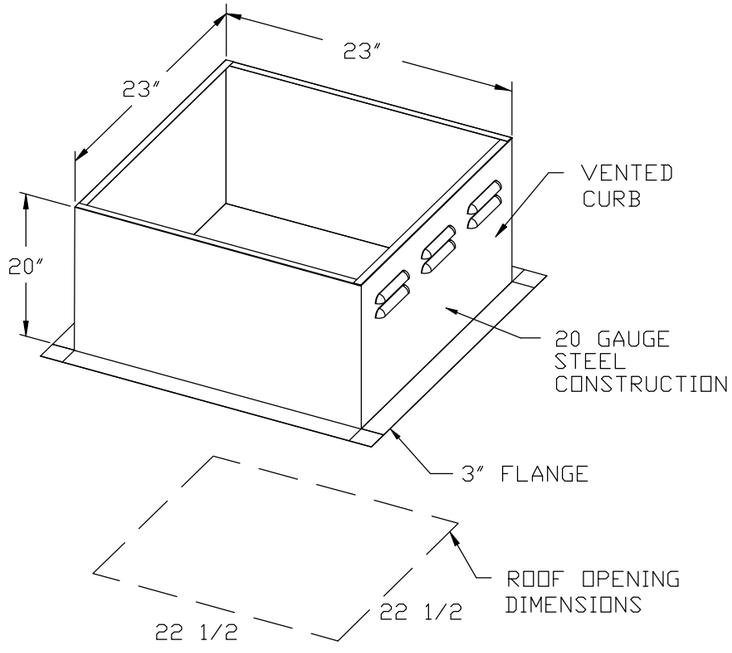

PITCHED CURBS ARE AVAILABLE FOR PITCHED ROOFS.

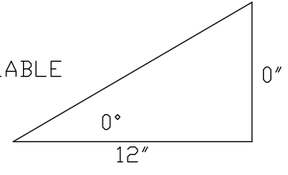

SPECIFY PITCH:
EXAMPLE: 7/12 PITCH = 30° SLOPE

FANS #2, #3 - BDU18K EXHAUST FAN

3-12.5 Pro

TYPICAL ROOFTOP HVAC UNIT

Unit Model #: **ZJ120S24R2D5BAA2A2**

System: **ZJ120S24R2D5BAA2A2**

Cooling Performance		
Total gross capacity	130.0	MBH
Sensible gross capacity	96.0	MBH
Total net capacity	120.7	MBH
Sensible net capacity	86.7	MBH
Efficiency (at ARI)	12.00	EER
Integrated eff. (at ARI)	14.60	IEER
Ambient DB temp.	95.0	°F
Entering DB temp.	80.0	°F
Entering WB temp.	67.0	°F
Leaving DB temp.	57.8	°F
Leaving WB temp.	56.7	°F
Power input (w/o blower)	9.00	kW
Sound power	83	dB(A)

Refrigerant		
Refrigerant type	R-410A	
Sys1	7 lbs	12 oz
Sys2	7 lbs	10 oz

Gas Heating Performance		
Entering DB temp.	60	°F
Heating output capacity (Max)	192	MBH
Supply air	4000	CFM
Heating input capacity (Max)	240	MBH
Leaving DB temp.	104.4	°F
Air temp. rise	44.4	°F
SSE	80.0	%
Stages	2	

Supply Air Blower Performance		
Supply air	4000	CFM
Ext. static pressure	0.6	IWG
Addl. Unit Losses (Options/Accessories)	0.58	IWG
Blower speed	1181	RPM
Max BHP of Motor (including service factor)	3.45	HP
Duct location	Bottom	
Motor rating	3.00	HP
Actual required BHP	2.94	HP
Power input	2.74	kW
Elevation	0	ft.
Drive type	BELT	
Requires field-supplied drive	true	

Electrical Data		
Power supply	208-3-60	230-3-60
Unit min circuit ampacity	50.9 Amps	50.9 Amps
Unit max over-current protection	60 Amps	60 Amps

Dimensions & Weight					
Hgt	51 in.	Len	89 in.	Wth	59 in.
Weight with factory installed options					1335 lbs.

Clearances					
Right	12 in.	Front	36 in.	Rear	36 in.
Top	72 in.	Bottom	0 in.	Left	36 in.

Note: Please refer to the tech guide for listed maximum static pressures

10 Ton

- JCI Pro units are manufactured at an ISO 9001 registered facility and each rooftop is completely computer-run tested prior to shipment.

Unit Features

- Two Stage Cooling
- 240 MBH Input Stainless Steel, Two Stage Gas Heat
- Unit Cabinet Constructed of Powder Painted Steel, Certified At 750 Hours Salt Spray Test (ASTM B-117 Standards)
- Full perimeter base rails with built in rigging capabilities
- Scroll Compressor[s]
- Dry Bulb Low Leak Economizer w/Barometric Relief and Power Exhaust and Hoods (Bottom or Horizontal End Return Only) with Economizer Fault Detection & Diagnostic (Meets ASHRAE 90.1-2013, IECC 2015, California Title 24, AMCA 511).
- Slide-out Blower/3 HP Belt Drive Motor Assembly
- Unit Ships with 2" Pleated Filters (MERV 8)
- Solid Core Liquid Line Filter Driers
- Replacement Filters: 4 - (24" x 20"). Unit accepts 2" or 4" wide filters.
- Non-Powered Convenience Outlet
- HACR Circuit Breaker/Disconnect
- Short Circuit Current: 5kA RMS Symmetrical
- Single Point Power Connection
- Through-the-Curb and Through-the-Base Utility Connections
- Phase Monitor
- Micro-Channel "all-aluminum" condenser coil, Copper tube/aluminum fin evaporator coil
- Composite Drain Pan - Front Connection
- Tool-free maintenance with features like hinged doors for all-access panels, slide-out blower and blower motor tray

BAS Controller

- IntelliSpeed control of the VFD based on stages of cooling. Provides Single Zone VAV Fan Operation as defined by ASHRAE 90.1 section 6.4.3.10.
- Smart Equipment Controller including Discharge Air, Return Air, and Outdoor Air Temperature Sensors.

Standard Unit Controller: Smart Equipment Control Board

- Safety Monitoring - Monitors the High and Low-Pressure Switches, the Freezestats, the Gas Valve, if Applicable, and the Temperature Limit Switch on Gas and Electric Heat Units. The Unit Control Board will Alarm on Ignition Failures, Safety Lockouts and Repeated Limit Switch Trips.

Warranty

- One (1) Year Limited Warranty on the Complete Unit
- Five (5) Year Warranty - Compressors and Electric Heater Elements
- Fifteen (15) Year Limited Warranty - Stainless Steel Heat Exchanger

April 7, 2021

Mr. Nick Dupuis
Plan Reviewer, City of Birmingham

Re: 720 N. Old Woodward – Vinewood Bistro (Lower Level in Kohler Building)

Dear Mr. Dupuis,

This letter addresses issues raised during the February 24th Planning Commission meeting at which time the project was postponed.

Since then, we have made revisions to the following items which should remove them from being contentious:

1. We have reduced the projection and valance height of the front canopy at Old Woodward to be compliant with the zoning ordinance.
2. We have reduced the projection and eliminated the ground mounted post which was not on our property at the rear entry canopy
3. We have noted the mechanical equipment screen height and included cut sheets for the proposed tallest rooftop equipment (the make up air unit).
4. We have added a new drawing showing all adjacent structures within 200 feet of the bistro and adjacent parking lot.
5. We have completed and added a photometric study plan

In addition to these specific technical requirements, a number of issues were raised by the commission which are addressed below:

<u>Wintergarden configuration and use</u>
The proposed wintergarden is an outdoor space where the exterior wall is comprised of permanently installed bronze screens and bronze screened man doors, with a new all glass wall with operable doors between the bistro interior and the Wintergarden. This space shall be heated with infrared electric heaters and will not utilize the HVAC system supplying the interior of the Bistro.

The screening allows for the opening of the glass wall doors between the Bistro and the Wintergarden when weather permits meeting Health Department requirements for preventing insects from entering the building. We are not proposing at any point to add any Isinglass or solid glass infills at the propose screen walls, and would propose to make that a condition of use.

The 26 proposed seats in the Wintergarden along with the proposed 38 seasonal

seats on the exterior portion of patio total 64 outdoor seats which are within the limit established by the Bistro ordinance.

The Wintergarden itself provides for the opportunity to apply for extended patio use for the 26 seats as a separate application available to all patios which is granted based on each specific location of patio in the City.

The building owner has adequate space in other floors of this building, and other spaces in the buildings he owns south of this project to store all outdoor furnishings requiring to be brought in daily.

Proximity of garage entry adjacent to proposed Bistro entry

Because of the configuration of grade at the neighboring south building garage entry, we believe there is less life safety concern with the cars entering this door due to the slow speed required to approach the grade then exists at the patios along Old Woodward where cars pull into angled spaces at speed, potentially overriding the curb and engaging patrons on sidewalk patios.

If the Planning Commission feels the need, we can add a guard component to prevent a pedestrian from engaging the change of grade.

Dumpster location and screening

We have studied the placement, configuration, enclosure and frequency of trash management for this project and the other businesses sharing this dumpster location. Currently, this project owner also owns the trash management company providing service there now.

The existing dumpsters leave a 13 ft 8 in clear drive, our solution provides for a 15 ft wide lane, allows for simpler servicing of the units, provides screening all around and accommodates a grease trap and ancillary storage space for cardboard which we have witnessed being stored at that area.

We shall work with the city to pursue any other required permits for the placement and use of this dumpster location.

Based on existing use and pickup schedule of twice weekly, we can increase the frequency of pickup to 3 times weekly or every other day as may be required based on the impact of the Bistro.

Deliveries

The typical Fedex and UPS deliveries expected for the Bistro are no different than that associated with the other businesses adjacent to this project, and the frequency is expected to be less than the adjacent businesses as they do not typically utilize those carriers for day to day business needs.

The delivery of food and dry good product will be scheduled to occur earlier daily as the operations of the restaurant require it. There will be no late night deliveries.

Clarification of number of seats and their location

This project proposes the following seats per the submitted plans:

Interior Seats	64
Wintergarden Patio Seats	26
Exterior Patio Seats	38

This results in 64 interior seats, and 64 patio seats.

Location of proposed outdoor patio

We believe strongly that the appropriate location for the patio associated with this Bistro belongs at the "storefront" of the bistro, and not dislocated on North Old Woodward. We interpret the intent of the Bistro Ordinance as providing seating in storefront windows with continuing the dynamic with the outdoor seating component. A freestanding patio on N. Old Woodward would be difficult to service and would be contrary to our interpretation of the ordinance.

We believe that the interest the City Commission expressed in this location for the Bistro promotes the proposed location of the patio.

With the changes to the construction of the patio noted in the paragraph following, we have also eliminated the fountains with lighting, and configured the patio with a built-in planter which will limit the number of patrons at the easternmost edge of the patio at its proposed location at the storefront of the Bistro.

Building within the AE floodplain/floodway

We have reviewed the State of Michigan Permit Requirements for building in the Floodplain and have revised our proposed construction of the entire rear patio and ramp area to be a wood framed structure with an IPE deck. As such we believe we can meet the requirements for permit approval with structural piers not interfering with floodwater flows. We also understand the flood insurance needs associated with building in the Floodplain.

This solution also provides for a simpler approach to the lease negotiation with the City for the proposed property on which the patio is proposed, allowing for simpler removal of the structure upon completion of the term of the lease.

The proposed use of wood also responds to the natural setting along the river.

Other Considerations:

We have visited this site during evening hours and have found that the most obtrusive component as viewed from the neighboring residential area is the existing pole mounted sodium vapor light lighting the northern end of the parking lot, and numerous pedestrian scaled city lights along the back of the building.

Signage Location:

We propose to pursue a variance for the sign location on the to be leased area for the patio. We believe this is the most reasonable location for the sign, and that its

removal would be required at the end of the term of the lease. The unique conditions of the project and the ability to provide for a subtle sign that would not set precedent as it would be tied to the lease makes the most sense. We will pursue a separate variance for this location.

Hours:

The owners shall address final operating hour considerations on hearing staff's information requested by Mr. Boyle on the operating hours of the 2 nearest bistros.

We look forward to continuing our dialogue with the commission, and hope the information provided above helps clarify the technical issues associated with this project.

Sincerely,

Roman Bonislawski, R.A.
Ron and Roman, Inc.

cc. Brian Najor
Christ Backos

Vinewood Bistro – April 6, 2021

Site Plan Review

<u>Itemized List of Revisions</u>

Front awning – reduced projection & valance height to be compliant with zoning ordinance

Rear canopy – reduced projection & eliminated ground mounted posts

Trash enclosure – revised layout to increase functionality

Roof screen – noted screen height & included cut sheets for heights of new equipment

Photometrics – added new photometric plan sheet to show proposed new light levels

Surrounding site – added new adjacent properties site plan, showing structures within 200' of bistro, and adjacent parking lot

Rear patio construction – revised construction method to wood deck framing on pier foundations rather than masonry walls with concrete slabs, as a better approach to new construction in the flood plain

Updated cut sheets – new wood decking, revised infrared heater, rooftop equipment, revised light fixtures, revised plantings

Narrative – included new narrative speaking to Planning Board's concerns discussed at previous meeting

275 E. Frank, Birmingham Mi 48009 248-723-5790

City Of Birmingham
Regular Meeting Of The Planning Board
Wednesday, February 24, 2021
Held Remotely Via Zoom And Telephone Access

Minutes of the regular meeting of the City of Birmingham Planning Board held on February 24, 2021. Chair Scott Clein convened the meeting at 7:30 p.m.

A. Roll Call

Present: Chair Scott Clein; Board Members Robin Boyle, Stuart Jeffares, Bert Koseck, Daniel Share, Janelle Whipple-Boyce, Bryan Williams; Alternate Board Members Jason Emerine (arrived 8:30 p.m.), Nasseem Ramin (all located in Birmingham, MI, except for Bryan Williams who was located in Commerce Charter Twp.)

Absent: None.

Administration: Jana Ecker, Planning Director ("PD")
Brooks Cowan, City Planner
Nick Dupuis, City Planner
Laura Eichenhorn, City Transcriptionist

02-026-21

B. Approval Of The Minutes Of The Regular Planning Board Meeting of February 10, 2021

On page three of the minutes, second paragraph, Mr. Share recommended that 'neighborhoods' be changed to 'neighborhood associations'.

Motion by Mr. Share
Seconded by Mr. Williams to approve the minutes of the Regular Planning Board Meeting of February 10, 2021 as amended.

Motion carried, 7-0.

ROLL CALL VOTE
Yeas: Share, Williams, Koseck, Boyle, Whipple-Boyce, Clein, Jeffares
Nays: None

02-027-21

C. Chair's Comments

Chair Clein welcomed everyone to the virtual meeting. He stated the meeting was being held under the auspices of state legislation. Chair Clein reviewed the meeting's procedures.

02-028-21

APPROVED

D. Review Of The Agenda

There were no changes to the agenda.

02-029-21

E. Special Land Use Permit and Final Site Plan & Design Reviews

1. 555 S. Old Woodward – Birmingham Pub (Formerly Triple Nickel), Special Land Use Permit Amendment request and Final Site Plan and Design Review to consider changes in ownership and name, as well as interior and exterior changes to allow the approval of Birmingham Pub, a food and drink establishment serving alcoholic liquor under an existing economic development license.

PD Ecker reviewed the item.

In reply to a question from Ms. Whipple-Boyce, PD Ecker noted that the Planning Board had the right to require changes to the third-floor balcony wall lights under the new SLUP. She stated the lights do not change quickly enough to run afoul of the ordinance regarding flashing lights. She stated that the City had not received any complaints regarding the wall lights.

After Board discussion regarding the wall lights, there was consensus that the effect of the lights was generally positive and did not need be limited by the SLUP.

There was also Board consensus that the eastern view of the kitchen should be cleared of pots, pans, and other clutter, and maintained that way.

Joseph Shallal, lawyer for the applicant, said the applicant, Joe Vicari, would commit to decluttering the view of the eastern window fronting Woodward.

Motion by Ms. Whipple-Boyce
Seconded by Mr. Boyle to recommend approval to the City Commission of the applicant's request for Revised Final Site Plan for Birmingham Pub restaurant at 555 S. Old Woodward with the following conditions: (1) The Planning Board designates the Bowers elevation as the principal building frontage ~~or the applicant reduces the overall building signage by 47.76 sq. ft.~~; (2) The applicant remove the proposed illumination from the building identification sign on Woodward Avenue or obtain a variance from the Board of Zoning Appeals; and (3) Applicant provide all material, color and lighting specifications for all signage.

Mr. Shallal asked if a variance would need to be obtained for the proposed illumination of the building identification sign on Woodward Avenue since a variance was previously granted for the illumination of that sign, and usually variances stay with the building.

APPROVED

PD Ecker said the applicant would have to request another variance from the BZA because all granted variances are tied to the specific submitted plans as a condition of approval.

Motion carried, 7-0.

ROLL CALL VOTE
Yeas: Whipple-Boyce, Boyle, Share, Williams, Koseck, Clein, Jeffares
Nays: None

Motion by Ms. Whipple-Boyce
Seconded by Mr. Boyle to recommend approval to the City Commission of the applicant's request for a Special Land Use Amendment for Birmingham Pub restaurant at 555 S. Old Woodward with the following conditions: (1) The Planning Board designates the Bowers elevation as the principal building frontage ~~or the applicant reduces the overall building signage by 47.76 sq. ft.~~; (2) The applicant remove the proposed illumination from the building identification sign on Woodward Avenue or obtain a variance from the Board of Zoning Appeals; (3) Applicant provide all material, color and lighting specifications for all signage; and (4) Applicant execute a revised contract with the City of Birmingham outlining the nature of the proposed operation of Birmingham Pub and approving the use of the existing Economic Development liquor license under the new name Birmingham Pub.

Motion carried, 7-0.

ROLL CALL VOTE
Yeas: Whipple-Boyce, Williams, Boyle, Share, Koseck, Clein, Jeffares
Nays: None

2. 720 N. Old Woodward – Vinewood Bistro (Lower Level in Kohler Building), Special Land Use Permit request and Final Site Plan and Design Review to consider approval of Vinewood, a new bistro proposed at the rear of the building, including the service of alcoholic liquor.

CP Dupuis reviewed the item.

Chair Clein noted the Board received two emails from residents of Brookside, across the Rouge River from the proposed Vinewood Bistro. The emails were from Drew Detling and Kristen Tait, both expressing concerns about the proposed plans. He noted the emails would be included in the March 10, 2021 Planning Board agenda packet.

Brian Najor, co-applicant, Roman Bonislawski, architect, Ron Rea, architect, and Chris Bakos, restauranteur and co-applicant, were present on behalf of the application.

Mr. Bonislawski explained:

- The garage door opening at the north end of building will be removed and turned into a screen;

APPROVED

- There will be an infrared linear gas tube heating component in the building;
- The building will have fire sprinklers throughout;
- The rooftop mechanical will be screened;
- The proposed ducting architecture in the back of the building is because Kohler cannot have new shafts built through it;
- The grade differential outside the garage in the rear of the building means cars can only enter/exit very slowly;
- The rear canopy will be redesigned without the freestanding column;
- The part of the patio furthest from the building will be not engaged at all, with plans to sink it a bit to dampen the noise;
- There will be adequate space to take in the outdoor furniture at night in the off-season; and,
- There will be a separate natural gas radiant heater in the outdoor space, but nothing coming off of the interior HVAC into the outdoor space.

PD Ecker noted that the applicant could do off-season outdoor dining as long as they secure a permit from the City and bring in the outdoor furniture every night.

Chair Clein said the design was beautiful. He said he was supportive of the rear sign aesthetically but would defer to legal considerations on that. He asked what the applicant could do to address some of the nearby residents' concerns.

Mr. Bonislawski said that the foliage blocks a lot of the sound and light in spring and summer. The planned outdoor lighting is minimalist. He said they could add more greenery along the metal partition screening along the ramp, which faces Brookside to the east. He said the applicant team would be averse to putting any greenery between the outdoor dining and the river since part of the charm is seeing the river. He said their plans also keep the seats closer to the building rather than further out towards the ramp in order to maintain the distance from Brookside as much as possible.

Public Comment

Helene Fertal, owner/operator of Birmingham Wine, spoke largely in favor of the application. Her concerns were the often overfull dumpsters behind the building, and the grease trap given issues with flooding in the immediate area.

Kristen Tait, resident of Brookside, provided a brief overview of the concerns previously expressed in the email she submitted to the Board. She said that noise would be her biggest concern. She said that she is able to see and hear clearly across the river in all seasons. She also clarified that even when the foliage comes in, it still does not block her views into Vinewood's proposed outdoor seating area, and vice-versa.

Rob Kamenec, Brookside resident, said he was deeply concerned about the prospect of increased noise from Vinewood especially with the proposed closing hours of 1 a.m. He observed that staff would be staying after 1 a.m. to finish cleaning and closing, meaning that the noise would necessarily occur even after 1 a.m.

APPROVED

Mr. Share said that one evening the prior week he had been walking by Social Kitchen at 8 p.m. when the temperature was not above freezing. He said the outdoor seating area at Social was very crowded. He asked for some assurance from the applicant that the winter garden at Vinewood will not replicate some of the issues the City has faced from the outdoor seating at Social.

Some Board members asked for some clarifications of the plans in addition to the ones specified by CP Dupuis in his report. Those requests for clarifications included:

- Information about how deliveries will be handled;
- A floor plan that makes the number of seats and their location clear;
- Comments on the plans from City departments, including and especially the Fire Department; and,
- Consideration of the appropriate dumpster configuration due to the proximity of the river.

Ms. Whipple-Boyce said that two dumpsters are not enough behind Vinewood, and said she has often seen trash on the placed outside the dumpster. She recommended Mr. Najor consider a compacting dumpster for the rear of the building. She said she would not recommend adding a third dumpster. She advised the applicant team to have a conversation with the building owner to the south in order to make sure that Vinewood's plans do not conflict with the rear garage door used by the condominium owner on the top floor of that building. She said she was in favor of the winter garden idea as long as it is well-maintained.

Mr. Koseck expressed concerns about the outdoor seating not activating the street, which he stated was a significant aim of the bistro ordinance. He said that having the seating in the back could make it hard to police. He also said the logistics of trash pick-up, deliveries and cleaning would be made more difficult by the entrance in the back.

Mr. Jeffares noted that when bistro options were reviewed by the Commission at their October 26, 2020 meeting, Mr. Najor proposed two bistros: Vinewood and a bistro in the center of town that would have activated the street. He highlighted the fact that the Commissioners advanced the plans for Vinewood, even with the understanding that the outside seating would not be on the street, because it seemed like a unique opportunity to have seating by the river.

Mr. Williams, Mr. Jeffares, and Mr. Boyle expressed concern about making sure that the proposed hours do not adversely affect the residents across the river.

Mr. Williams recommended that staff return with information on the hours of operation for Market North and Luxe Bistro, the two nearest bistros, to see how those hours compare to the hours proposed for Vinewood.

Mr. Boyle said reviewing noise or other complaints for the two aforementioned bistros might clarify Vinewood's potential impact on the residents across the river since those two bistros abut residential area.

Mr. Koseck and Mr. Jeffares expressed concern about the high number of total proposed seats since the application was coming in as a bistro and not as a Class C license.

APPROVED

Mr. Emerine noted that the area behind the building is a regulated floodway, and that raising the ground elevation would require additional permits.

PD Ecker stated that information had been communicated to the applicant team.

Motion by Mr. Boyle
Seconded by Mr. Williams to postpone the discussion regarding 720 N. Old Woodward – Vinewood Bistro – to the April 14, 2021 Planning Board meeting.

Motion carried, 7-0.

ROLL CALL VOTE
Yeas: Whipple-Boyce, Williams, Boyle, Share, Koseck, Clein, Jeffares
Nays: None

Motion by Mr. Williams
Seconded by Mr. Share to suspend the rules for the April 14, 2021 Planning Board meeting to allow the review of site plans.

Motion carried, 7-0.

ROLL CALL VOTE
Yeas: Whipple-Boyce, Williams, Boyle, Share, Koseck, Clein, Jeffares
Nays: None

Mr. Jeffares noted the City should take a look at the lighting in Lot Six to see whether that can be better screened so as not to adversely affect the residences across the river.

02-30-21

G. Miscellaneous Business and Communications:
a. Communications
b. Administrative Approval Correspondence

After a brief review of the proposal from CP Dupuis, the Planning Board told Randy Dickow they had no initial hesitations about the Mad Hatter moving into the vacant space next door to their current location in order to expand their access to space for outdoor dining.

In reply to Mr. Jeffares, Mr. Dickow said he would remove the two gazebos currently in front of the Mad Hatter as soon as possible.

CP Dupuis then presented a brief proposal from Brooklyn Pizza that would include two outdoor dining pods.

Mr. Williams and Mr. Boyle said they did not like the proposed pod to the north.

APPROVED

Chair Clein said the zigzag path that would result from the ~~adding~~ **addition of** the dining pods would have negative ramifications for a visually impaired person's ability to navigate the sidewalk around the restaurant.

Ms. Whipple-Boyce said she could not endorse an administrative approval of the dining pods without more information on the proposed design and build.

c. Draft Agenda for the next Regular Planning Board Meeting (March 10, 2021)
d. Other Business

Chair Clein agreed with Mr. Williams that it would be helpful for the Board to receive feedback from the Commission regarding the master planning process thus far.

In order to solicit that feedback, the Chair explained the master planning team would be providing the Board with a letter summarizing their understanding of all the recommended changes to the first draft for the Board to review at their March 10, 2021 meeting. After the Board's review of the letter, the letter will then be sent on to the Commission with a request from the Board for feedback on the recommended changes.

02-031-21

H. Planning Division Action Items

a. Staff Report on Previous Requests
b. Additional Items from tonight's meeting

02-032-21

I. Adjournment

No further business being evident, the Chair adjourned the meeting at 10:23 p.m.

Jana L. Ecker
Planning Director

APPROVED

		Restaurant Seating			Indoor Hours of Operation							
Restaurant Name	**Address**	**Indoor**	**Outdoor**	**Total**	**S**	**M**	**T**	**W**	**T**	**F**	**S**	**Outdoor Ends**
Adachi Sushi	325 S. Old Woodward	65	67	132	11:30 am - 10 pm	11:30 am - 10:30 pm			11:30 am - 11:30 pm			12:00 am
Bella Piatti	167 Townsend	62	28	90	11:00 am - 12:00 am							12:00 am
Birmingham Sushi Café	377 Hamilton Row	65	24	89	11:00 am - 9:30 pm	11:00 am - 10:30 pm			11:00 - 11:00 pm			12:00 am
Bistro Joe's	34244 Woodward	64	60	124	8:00 am - 9:30 pm							12:00 am
Churchills Bistro & Cigar Bar	116 S. Old Woodward	63	12	75	Never provided							12:00 am
Elie's Mediterranean Grill/Bar	263 Pierce	64	24	88	Never provided							12:00 am
Forest Grill	735 Forest	64	30	94	11:00 am - 12:00 am							12:00 am
La Strada Café	243 E. Merrill	65	14	79	8:00 am - 3:00 pm	7:00 am - 10:00 pm				7:00 am - 11:00 am		12:00 am
Luxe Bar & Grill	525 N. Old Woodward	59	12	71	11:00 am - 11:00 pm							12:00 am
Mad Hatter Café	185 N. Old Woodward	58	24	82	9:00 am - 10:00 pm					9:00 am - 11:00 pm		10:00 pm
Maple Road Taproom (Whole Foods)	2100 E. Maple	36	33	69	8:00 am - 10:00 pm							10:00 pm
Market North End	474 N. Old Woodward	64	44	108	11:00 am - 12:00 am							12:00 am
Pernoi	310 E. Maple	65	26	91	Special Events Only		5:00 pm - 11:00 pm					12:00 am
Salvatore Scallopini	505 N. Old Woodward	64	34	98	11:00 am - 12:00 am						9:30 am - 12:00 am	12:00 am
Social Kitchen & Bar	225 E. Maple	64	86	150	9:30 am - 12:00 am	11:00 am - 12:00 am					9:30 am - 12:00 am	12:00 am
Tallulah Wine Bar & Bistro	155 S. Bates	64	42	106	11:00 am - 12:00 am							12:00 am
Toast	203 Pierce	65	59	124	8:00 am - 4:00 pm	7:00 am - 3:00 pm		7:00 am - 8:00 pm			8:00 am - 9:00 pm	Same as Business
Townhouse	180 Pierce	50	64	114	Never provided							12:00 AM

Dear members of the Birmingham Planning Board:

I am writing in regard to the proposed bistro “Vinewood Bistro” at 720 N Old Woodward. This is proposed for the back lot of Parking Lot No. 6, behind the Merrillwood building & associated buildings to its north. My properties, 692 and 724 Brookside Ave., are across the Rouge to the east and look directly onto the lot and building. I disagree with the proposal and urge the Board to deny the application for the following reasons:

1. Increased noise & traffic
2. Increased light pollution
3. Location
4. Restaurant density/saturation, especially with regards to traffic & parking

To begin, let me provide some physical context to help support this comment of Nicholas Dupuis’: *“[T[here are single family residences across the river that may be affected by any noise or light emanating from the proposed patio.”* [1]

> Because my properties are on a substantial hill and are much higher than the level of Lot 6, they have a direct view down onto this area. After the 2018 extension of the lot and removal of trees/brush on the west side of the Rouge, which was preceded by the loss of many elm trees due to the emerald ash borer, there is now very little natural shielding. As a result, I can see everything that goes on in the lot and often what happens inside the buildings. This clear sightline is, of course, heightened during winter. From my upstairs windows I have an even more unobstructed view.
>
> The landscaping planted after the 2018 lot extension is not thriving; as I look out of my window, 5 of the 12 evergreens I see are brown and dying/dead. During the spring thaws and large rain events the lot often is partially underwater. While plantings at the south end of the parking lot were chosen with inundation in mind, the remainder of the plantings obviously were not. Thus, shielding from mature evergreens in the landscaping is less likely and is at least several more years into the future. Because of the hill and driveways, I cannot use landscaping on my own properties to shield my view (to cover my upstairs windows, trees need to grow at least 50 feet, something only achieved by three existing 100-year old oaks.

Regarding the bistro itself, I have four main objections:

---

[1] Memorandum of February 24, 2021 from Nicholas Dupuis, City Planner, to Jana Ecker, Planning Director, as included in the Full Agenda of the February 24, 2021 Planning Board meeting, page 81.

1. **INCREASED NOISE POLLUTION & TRAFFIC**

As I stated above, there is very little shielding my properties from Lot 6 and its buildings. Luckily, during the day there is minimal noise, as the lot is used mainly by employees and short-term visitors to the businesses. At night, noise is from patrons of Market North End, Luxe, & Salvatore Scallopine; at times this can get quite raucous, but it is rare that those patrons park directly across from me. Regardless, I hear car doors, engines, the occasional car alarm, and even loud conversations. I can even set my watch by the schedule of the office cleaners, who dispose of their trash in the dumpsters and then idle their engines around midnight Monday-Saturday.

A bigger noise impact is indeed from the dumpsters (at both ends of the lot) which are emptied most days between 6 and 7:30am; the accompanying bangs and wall-shaking thuds are heard and felt quite clearly. More intrusive yet is the Farmer's Market; for 6 months (May to October), every Sunday it often gets loud enough that I cannot drown out the noise with music (played inside my home with the windows closed).[2]

With the exception of petitioning the Farmer's Market organizers to limit/eliminate amplified music (both recorded and live), I have accepted that these noises are part of living in what is now an urban environment. I am no stranger to city life, having lived in various downtowns during my graduate school years, and accept that sounds like dumpsters emptying and car doors are part of the city soundscape. However, with each additional noise source the enjoyment of living in my house diminishes, and I fear the value of my property will drop further. The increased traffic noise from Woodward has already affected the assessment of my property, as evidenced from the bank appraisal done last year during the course of refinancing my home equity loan.[3]

With Vinewood Bistro operating in this location, more noise will be constant all day long, seven days a week. Judging from behavior of diners at the three established night-time restaurants in this city block, patrons will not merely dine inside/on the patio but will also congregate around cars and on the walkways. In addition to the public hours, restaurant staff will be prepping early and cleaning up late – an impact often overlooked by planners. I do not see a staff break room on the plans, so I expect that staff will take breaks in the parking lot, much like they do in the alleys behind other Birmingham restaurants. In addition, also in the early hours deliveries will be made and dumpsters emptied more frequently and/or in greater quantity.

---

[2] An exception was the 2020 season, as the market was drive-through only that year and as a result, was hardly noticeable.

[3] "[A] potentially adverse noise" because the property "is adjacent to a busy road (in the rear)…[T]his has been considered to have an effect on value or marketability". *CoreLogic Valuation of 692 Brookside Ave from March 25 and May 15 2020.*

I take this time to mention the chance for increased vermin. Rats are endemic to cities; I do not expect Birmingham to be exempt. However, we have been fortunate in my neighborhood to escape large-scale infestation.[4] While much of this can be attributed to good garbage handling and yard maintenance, there is also the fact that the majority of the waste deposited in Lot 6's dumpsters is not from food.

2. **INCREASED LIGHT POLLUTION**

As detailed above, a large amount of natural shielding/buffer between Lot 6 and Brookside has been lost in recent years. With the installation of new street lamps in the lot, plus the construction of the Pearl and consequent reduction in mature trees at the north end of Brookside, my properties are now never dark. Blackout curtains in the bedrooms are necessary to block out enough light to allow the rooms to be somewhat conducive to sleep. The twinkling of the red lights from the newer parking meters has also added to the light pollution reaching my properties. We cannot afford to have more light reach us on Brookside – not only from the bistro but from the headlights of the cars of bistro patrons.

3. **LOCATION**

The entire back of Lot 6, and especially the new extension, are in a Special Flood Hazard Area (SFHA) as designated by FEMA[5] (see also the attached map). In fact, the entire Merrillwood complex and the back half of buildings to its north – **including this proposed bistro location** - are in in the SFHA, with the majority of the back of Lot 6 designated further as Regulatory Floodway. This alone should be enough to dissuade the Planning Board from approving this application.

Natural flooding is common in this area, both from spring thaws and from heavy rain events. Further development/use of the area should be discouraged.

This is the back of 720-790 Woodward in March 2020:

---

[4] The exception, of course, is Market North End; in recent years I have seen rats on occasion when walking on Ravine at dawn/dusk, and cannot help but think they are the direct result of the dumpsters behind that restaurant.

[5] https://msc.fema.gov/portal/search?AddressQuery=692%20Brookside%20Ave%2048009#searchresultsanchor . See also: https://msc.fema.gov/arcgis/rest/directories/arcgisjobs/nfhl_print/agolprintb_gpserver/jbd5c654db52c4c2f9477e75f402e1796/scratch/FIRMETTE_31170d74-ed41-47a0-bfdf-8b6c911784e2.pdf

In February of 2019 (as seen from Brookside Ave)

February 2017:

February 2016 (This is a still from a 3-minute video):

4. **RESTAURANT DENSITY/SATURATION**

While the zoning of this portion of Old Woodward does allow for use as a bistro, within 1 block there are already 3 (soon to be 4) dining establishments that are open at night and serve alcohol. Three additional daytime cafes are also open. Had the Planning Board and the City Commissioners really wanted to expand the bistro dining opportunities in this area, there would have been an optimal chance to do so when The Pearl was proposed and built. Instead, there is now concern over the parking impact a 2-table juice bar will have – what will the impact be of a full-service lunch & dinner bistro serving alcohol? Isn't it contradictory to discourage a juice bar with its quick service and short visits at the same time you encourage an establishment that will have lengthier visits and 64 patrons?

The vehicle and pedestrian traffic at the corners of Ravine/Old Woodward and Harmon/Old Woodward is already heavy at night and on the weekends. Rare is the day/night that I use Ravine to exit/access my neighborhood. Between delivery trucks in the morning on Ravine and in the center of Old Woodward, jaywalkers at all times, and drivers who idle waiting for the perfect parking spot, the area has become increasingly risky to drivers. The perennial problem of protecting pedestrians crossing Old Woodward has yet to be solved, and I fear the day a serious (or, god forbid, fatal) accident occurs from a distracted driver. The area is utilized enough and, in my opinion, would not benefit from the additional of yet another bistro.

Based on the October 26, 2020 City Commission meeting minutes, another location in Downtown Birmingham has been also proposed for a similar concept bistro by the same owner. This location is a much more suitable property to consider, especially considering the recent closure of several restaurants in the same area. As the current pandemic continues to ravage the hospitality industry, I believe it would be prudent to encourage redevelopment of empty properties in Downtown, rather than forcing a restaurant onto a new location.

My family has lived on Brookside since 1942, I grew up here, and I moved back more than twenty years ago. I feel lucky to being still living and working here. Part of the attraction of living in my neighborhood is the seclusion from the commercial portion of Birmingham. In fact, Little San Francisco (or The Ravines, the proposed new name) is desirable because it is not just close to Old Woodward and Downtown Birmingham but is uniquely private and intimate as well. The proposed bistro does not enhance these features but instead intrudes unnecessarily into a quiet residential area.

Thank you for taking the time to consider my comments.

Sincerely,
Kristen Tait
I encourage the Planning Board members to visit my street (and climb up my stairs) to see my view for themselves. However, in case that is not feasible, here are several photos that approximate the right scale:

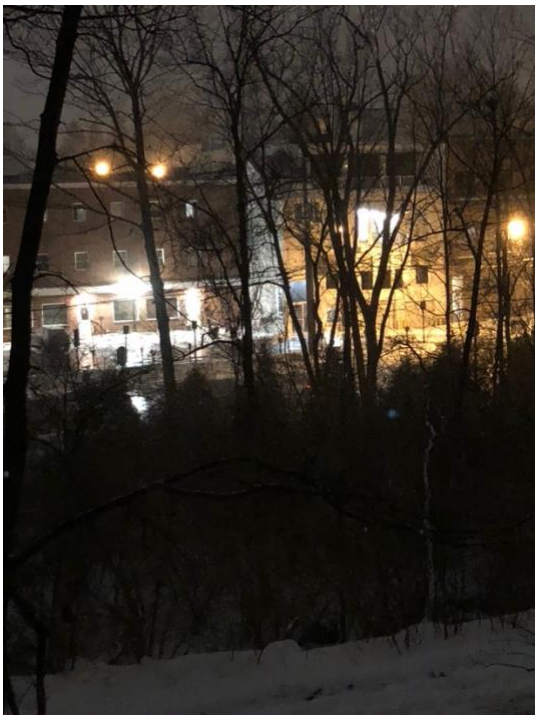

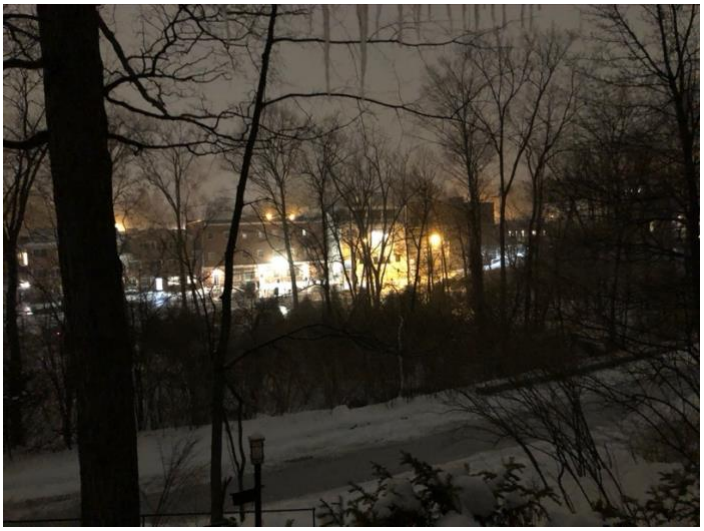

Nicholas Dupuis <ndupuis@bhamgov.org>

Fwd: 720N. Old Woodward - Vinewood Bistro

Drew Dettling <dsdettling@comcast.net> Wed, Feb 24, 2021 at 11:04 AM
To: ndupuis@bhamgov.org

Nicholas

Below is an email I just sent Jana. I'm pretty sure it's too late to distribute to Planning Board members for tonight's meeting (if you could get it in their hands, that would be great). But I did want them to know that Brookside residents do have an opinion.

Drew Dettling

Begin forwarded message:

From: Drew Dettling <dsdettling@comcast.net>
Subject: 720N. Old Woodward - Vinewood Bistro
Date: February 24, 2021 at 10:52:05 AM EST
To: jecker@bhamgov.org

Jana

I'm writing to voice my opposition to the Vinewood Bistro, which will be the subject of a Special Land Use Permit and Final Site Plan and Design Review hearing tonight before the Planning Board. I apologize in advance for the tardiness of this letter, but I've been out of town and just received the hearing notice yesterday.

By way of background, I live at 740 Brookside Ave. My home is directly across Parking Lot #6 and the Rouge River from the proposed Bistro. As you know, Brookside Ave is a quiet residential dead-end street of single family homes. I have significant concerns about the hours of operations, light and noise 'pollution' and kitchen odors of the proposed Bistro. The homes on Brookside sit at higher elevations from the street and the foliage along the river provides minimal screening from Lot #6 (even in the summer). The proximity of the proposed Bistro to our homes is roughly equivalent to having your house sitting on the play structure in Booth Park, facing Market Northend. The light, noise and odors from Vinewood will significantly detract from our ability to enjoy the peace and quiet of our homes. It will also significantly detract from the value of our homes. Since the developer / operator of Vinewood has not yet specified the hours of operation, I'm assuming the worst case; they will want to be open until 1am, similar to Luxe. This is not tenable.

Regarding the situation with the dumpsters, the current dumpsters in Lot #6 fill rapidly, requiring collection 2-3 times per week. The dump trucks typically pick up at 6am, further disturbing our peace and quiet. With the addition of Vinewood, either more dumpsters or more frequent collection will be needed. And since the dumpsters sit right next to the river, any overflow of kitchen waste will create a bad environmental situation, not to mention the need for additional pest and rodent control.

I understand the intent of the Bistro Ordinance is to activate the streetscape and promote a more pedestrian oriented environment, by requiring outdoor dining. 'Bistros must have tables located in the storefront space lining any street, or pedestrian passage'. Vinewood's outdoor dining abutting Parking Lot # 6 stretches the definition of street or pedestrian passage to the breaking point. I don't understand the purposed of 'activating' a surface parking lot. If Vinewood wanted to comply with the spirit of the Ordinance, they would find a way to place the Bistro so it's outdoor dining fronted on Old Woodward.

To the best of my knowledge, no Bistro in Birmingham has an entrance, signage and outdoor dining facing single family residential housing. I think that is for a reason; protect and respect the single

family neighborhoods. Prior Planning Board and Bistro owner decisions have respected that intent. Approving Vinewood as proposed would break with that precedent and open the possibility for further deterioration of our neighborhoods. I thought the City's recent strategic planning effort was placing more emphasis on the neighborhoods. I don't believe approving Vinewood is honoring the intent of the strategic plan.

Respectfully,

Drew Dettling
740 Brookside Ave.

City of Birmingham
A Walkable Community

MEMORANDUM

Planning Division

DATE: **August 12th, 2020**

TO: **Jana Ecker, Planning Director**

FROM: **Nicholas Dupuis, City Planner**

SUBJECT: **Solar Panel Requirements – Study Session #3**

In 2009, the City Commission adopted ordinance language permitting solar panels on structure roofs in all zoning districts throughout the City. Since its adoption, there have been many solar panels installed across the City, and several in the process of being approved by the Planning Board and/or Planning Division.

On May 22nd, 2019, the Planning Board discussed the evolution of solar panels and their perception that aesthetics are no longer an issue that should require a full Design Review by the Planning Board. The Board members also revisited a suggestion that was discussed in 2009, which was to waive fees for solar panel applications to encourage alternative energy use and sustainability.

On June 17th, 2019, the Planning Board and City Commission discussed the potential for ordinance amendments to simplify the review process for solar panels. During the meeting, a consensus was reached that the City's solar ordinance was in need of an update.

On January 8th, 2020, the Planning Board reviewed revised ordinance language and directed staff to make a few minor revisions and clarifications which involved the removal of ground mounted solar facility standards and adding language for anti-reflective coatings.

On July 15th, 2020, the Planning Board reviewed the revised language a second time and made a request to learn more about ancillary equipment and what types of such may be placed on a home, and where it may be commonly placed. The Planning Division has reached out to several solar power companies, and has researched previous solar panel proposals to get a better sense of what ancillary equipment is commonly used, and general reasons why:

Equipment	Description
Large Single-Unit Inverter	Changes DC current from panel to usable AC current. Typically located near utility meter.
Micro Inverter	Changes DC current from panel to usable AC current. Micro Inverters are located on the rear of each panel, eliminating the need for one larger single-unit inverter. More common.
Sub Panels	Dedicated circuits to power specific household items (ex. fridge, laundry. etc.) Located inside adjacent to main panel.

Storage Battery	Stores excess energy collected for later use. Rated for indoor/outdoor placement, but most commonly placed inside.
Battery Disconnects	Functions as a disconnect and one-way circuit to prevent energy backflow out of storage battery. Usually located close to battery inside or outside.
Disconnect Switches	Switches that stop the flow of power. Could be more than one, and is required to be located no more than 5 ft. from the utility meter.
Junction Box	Serves as a monitoring system that detect production. Can be located inside or outside. Optional, not necessarily required.
Metal Conduit	Houses all wiring from solar panels, through ancillary equipment, and into the home.

In reviewing several of the plans for solar installations in the last two years, the information provided above appears to be confirmed by the locations of ancillary equipment on the plans, which in general is always located on the side or rear of the house near the utility meter.

As the Zoning Ordinance currently reads, roof-mounted solar electric systems are permitted in all Zoning Districts, with any proposals for front, street oriented systems required to come before the Planning Board or Historic District Commission for a Design Review. The attached language offers an update to this language based on the feedback of the Planning Board and City Commission eliminating the Design Review Requirement for *non-historic homes only*. In addition, it was important for City Staff (while the subject of solar panels is active) to address and update the entire section of ordinance to remove barriers to the use of alternative energy solutions and encourage viable sustainability efforts. The proposed updates add requirements for new and emerging technologies such as solar shingles and solar energy storage, as well as address different options and that were not included in the original language, such as ground-mounted solar electric systems.

Note: The decision was made to move the language for solar panels from the Essential Services section to the Alternative Energy section of the ordinance, as it is a much better fit. In order to edit the ordinance properly, it was easiest to “delete” all of the existing ordinance language in Section 4.88 and create an entirely “new” Section 4.88. The language for wind energy facilities in the “new” Section 4.88 is EXACTLY the same, it is merely organized in a slightly different way. Please be advised, however, of the changes made in **bold blue** that apply to the wind energy facility language, which are changes to the Zoning Districts in which Section 4.88 apply.

CITY OF BIRMINGHAM

ORDINANCE NO. _____

THE CITY OF BIRMINGHAM ORDAINS:

AN ORDINANCE TO AMEND THE SIGN ORDINANCE OF THE CITY OF BIRMINGHAM:

TO AMEND ARTICLE 4, SECTION 4.09, ESSENTIAL SERVICES, TO REMOVE ROOF-MOUNTED SOLAR ELECTRIC SYSTEMS

4.09 ES-01

This Essential Services Standards section applies to the following districts:

B1 B2 B2B B2C B3 B4 MX 01 02 P PP R1 R1A R2 R3 R4 R5 R6 R7 R8 TZ1 **TZ2** TZ3

The following essential services standard applies:

A. Essential Services: Essential services shall be permitted as authorized and regulated by law and other ordinances of the city and are exempt from the application of the Zoning Ordinance.

~~B. Roof-Mounted Solar Electric Systems:~~

~~1. Roof-mounted solar panels are permitted on buildings and structures in all zoning districts and may include integrated solar panels as the surface layer of the roof structure with no additional apparent change in relief or projection, or separate flush mounted solar panels attached to the roof;~~

~~2. Separate, non-integrated flush-mounted solar panels shall be located on a rear- or side-facing roof, which do not front any street, unless such installation is proven to be ineffective or impractical. If installation is not practical on a rear- or side-facing roof, any other placement in all zoning districts shall be subject to a Design Review by either the Planning Board (non-historic properties) or the Historic District Com- mission (historic properties);~~

~~3. Separate flush-mounted solar panels installed on a building or structure with a sloped roof surface shall not project vertically above the peak of the roof to which it is attached, or project vertically more than five (5) feet above a flat roof installation; and~~

~~4. No solar panels shall ever project higher than the permitted building height in any zoning district.~~

ORDAINED this _____ day of _____, 2021 to become effective upon publication.

Pierre Boutros, Mayor

Alexandria Bingham, City Clerk

CITY OF BIRMINGHAM

ORDINANCE NO. _____

THE CITY OF BIRMINGHAM ORDAINS:

AN ORDINANCE TO AMEND THE SIGN ORDINANCE OF THE CITY OF BIRMINGHAM:

TO AMEND ARTICLE 4, SECTION 4.88, ALTERNATIVE ENERGY, TO ADD AMENDED SOLAR ENERGY SYSTEMS REQUIREMENTS

~~4.88 UT-01: Alternative Energy~~

~~This Utility Standards section applies to the following districts:~~

~~B1 B2 B2B B2C B3 B4 MX 01 02 P TZ3~~

~~The following utility standards applies:~~

~~A. Purpose and Intent: The purpose and intent of the city is to balance the need for clean and renewable energy resources with the necessity to protect the public health, safety and welfare of the city, as well as to preserve the integrity, character, property values, and aesthetic quality of the community at large. The city shall allow as an accessory use, with review by the Planning Board and/or Historic District Commission, the construction and operation of wind energy facilities and to provide standards for the placement, design, construction, monitoring, modification and removal of wind facilities that address public safety, minimize impacts on scenic, natural and historic resources without significantly increasing the cost or decreasing the efficiency of such systems.~~

~~B. Applicability: This section applies to all on-site wind energy facilities. Any physical modification to existing wind energy facilities that materially alters the type, increases the size, or increases the adverse impact on surrounding properties, shall require a review by the Planning Board and/or Historic District Commission.~~

~~C. Planning Approval Required:~~

~~1. Wind energy facilities shall be limited to the average needs of the structure on the same parcel and shall be a permitted accessory use; subject to the required standards of this section provided they are incidental and secondary to a permitted principal use on the same parcel. The rated capacity of wind energy facilities must correlate with consumption.~~

~~2. Wind energy facilities may be connected to the electrical grid when a parcel on which the system is installed also receives electrical power supplied by a utility~~

~~company. If a parcel on which a system is installed also receives electrical power supplied by a utility company, excess electrical power generated and not presently needed for on-site use may be used by the utility company in accordance with applicable state and federal law.~~

~~3. Wind monitoring (anemometer) towers are permitted in all non-residential zoning districts subject to the issuance of a temporary use permit and a building permit. Permanent anemometer towers shall be subject to review and approval in conjunction with wind energy facility.~~

~~4. No wind energy facility shall be erected, constructed, installed or modified as provided in this section without first obtaining approval from the Planning Board and/or Historic District Commission. The construction of a wind energy facility shall be permitted in non-residential zoning districts as an accessory use subject to the approval of the Planning Board and/or Historic District Commission and provided that the use complies with all requirements set forth in this section.~~

~~The Planning Board and/or the Historic District Commission have the discretion to deny plans based on aesthetics of the wind energy system. All such wind energy facilities shall be constructed and operated in a manner that minimizes any adverse visual, safety, and environmental impacts. No approval of any board or commission shall be granted unless it is found that:~~

~~a. The specific site is an appropriate location for such use;~~
~~b. The use is not expected to adversely affect the area;~~
~~c. There is not expected to be any serious hazard to people, property or animals from the use;~~
~~d. No nuisance is expected to be created by the use; and~~
~~e. Adequate and appropriate facilities will be provided for the proper operation of the use.~~

~~5. Approvals may also impose reasonable conditions, safeguards and limitations and require the applicant to implement all reasonable measures to mitigate unforeseen adverse impacts of the wind energy facility, should they occur.~~

~~6. Multiple wind energy facilities may be permitted provided they meet all requirements specified in the Zoning Ordinance and their number and placement is appropriate for the site and is architecturally and visually compatible with the surrounding area.~~

~~D. General Site Standards:~~

~~1. *Height*: No wind energy facility may exceed the maximum permitted or actual legal non-conforming building height by more than 20 ft. in any district~~

2. ~~*Noise*: Except during short-term events including utility outages and severe wind storms, wind energy facilities shall be designed, installed and operated so that noise generated by the system shall be the lesser of 60 dB as measured at any closest inhabited dwelling or 55 dB at the boundary of any adjacent property line.~~

3. ~~*Location*:~~

   a. ~~The center of a wind energy facility turbine tower shall be set back no less than 5 feet from all lot lines and rights-of-way or no less than one-half the diameter of the rotor and blades, whichever is greater.~~
   b. ~~The swept area of wind energy facilities must be set back at least 3 feet from any lot line.~~
   c. ~~Wind energy facilities may not be located between the front lot line and the front wall of the principal use.~~
   d. ~~No portion of any wind energy facility's exposed moving parts shall extend to within 20 feet of the ground, or to within 10 feet of any overhead utility lines, or as determined by a utility company.~~

4. ~~Screening: Screening of ground mounted mechanical equipment is required in accordance with Article 4, Section 4.54 SC-01 Screening of the Zoning Ordinance, in order to mitigate aesthetic impacts upon the neighborhood.~~

5. ~~Shadow Flicker: Wind energy facilities shall be sited in a manner that minimizes shadowing or flicker on adjacent properties. The applicant has the burden of proving that this effect does not have significant adverse impacts on neighboring or adjacent uses through siting or mitigation.~~

6. ~~Access and Safety:~~

   a. ~~Wind energy facilities shall be designed and installed so as to prevent unauthorized access to electrical and mechanical components and shall be secured or locked at all times when service personnel are not present.~~
   b. ~~Climbing apparatus shall be located in a place that is in accordance with MIOSHA standards as to prevent climbing.~~

7. ~~*Removal*: Any wind energy facility that has not been used in 180 days, or has otherwise been deter- mined abandoned, shall be removed by the owner and/or operator of the facility. If a wind energy facility has not been removed within 30 days a deadline specified by the City, the City of Birmingham may remove or secure the removal of the facility at the owner/operator's sole expense. All equipment associated with the facility shall be removed at the same time.~~

~~E. Design Standards:~~

1. ~~*Color and Finish*: The Planning Board shall have discretion over the turbine color, although a neutral, non-reflective exterior color designed to blend with the surrounding environment is encouraged. If the site is located within a historic district , the Historic District Commission will have discretion over the turbine color.~~

2. ~~*Lighting*: Wind Energy Facilities may be lighted only if required by the Federal Aviation Administration. Lighting of other parts of the wind energy facility, or related structures, shall be limited to that required for safety and operational purposes, and shall be reasonably shielded from abutting properties. If lighting is necessary a photometric plan is required.~~

3. ~~*Signage*: Signs on the wind energy facility shall comply with the requirements of the City of Birmingham's Sign Ordinance, and shall be limited to:~~

   ~~Wind energy facilities shall not be used for displaying any advertising except for reasonable identification of the manufacturer or operator of the wind energy facility.~~

   a. ~~Those necessary to identify the owner, provide a 24-hour emergency contact phone number, and warn of any danger; and~~
   b. ~~Educational signs providing information about the facility and the benefits of renewable energy~~

4. ~~*Utility Connections*: All utility connections for and from the wind energy facility shall be located under- ground. Electrical transformers for utility interconnections may be above ground if required by utility provider but must be screened according to the Zoning Ordinance.~~

5. ~~Related Structures: All related structures to wind energy facilities shall be subject to regulations concerning bulk and height of accessory structures as well as all other development standards. All related structures, including but not limited to, equipment shelters, storage facilities, transformers, and substations, shall be architecturally compatible with each other and adjacent buildings and shall be contained within the turbine tower whenever technically feasible. Structures shall only be used for housing equipment for this particular site.~~

F. ~~Submittal Requirements:~~

1. ~~Wind energy facilities are subject to Site Plan Review or Design Review by the Planning Board and/or the Historic District Commission.~~

2. ~~All wind energy facilities shall obtain a building permit, along with any other permits required by federal, state and local agencies, prior to erecting a system.~~

3. ~~Proof of Liability Insurance: The applicant shall be required to provide evidence of liability insurance in an amount and for a duration sufficient to cover loss or damage to persons and structures should there be a failure of the wind energy facility.~~

4. ~~Site Control: At the time of application for a Site Plan Review, the applicant shall submit documentation of actual or prospective control of the project site sufficient to allow for installation and use of the pro- posed facility. Documentation shall also include proof of control over setback areas and access roads, if required. Control shall mean legal authority to prevent the use or construction of any structure for human habitation within the setback areas.~~

5. ~~Site Plan:~~

   a. ~~A site plan signed and sealed by a licensed engineer, of the subject property and all properties within 200 feet showing existing buildings and structures, utility lines and poles, landscaping and all other items which may effect the placement of the wind energy facility.~~

   b. ~~An elevation drawing of the proposed location of the wind energy facility.~~

   c. ~~Color photographs and an elevation drawing with the wind energy facility and all necessary equipment superimposed in the proposed location.~~

   d. ~~Specification sheets for all equipment, identifying all parts of the system, including, but not limited to, the manufacturer and model, turbine, tower height and type, rotor diameter, foundation, any accessory equipment, and the manufacturers electrical plans and specifications.~~

   e. ~~Any other information or evidence required by City Officials.~~

4.88 UT-01: Alternative Energy

This Utility Standards section applies to the following districts:

R1 R1A R2 R3 R4 R5 R6 R7 R8 B1 B2 B2B B2C B3 B4 MX 01 02 P TZ1 TZ2 TZ3

The following utility standards applies:

A. **<u>Purpose and Intent</u>: The purpose and intent of the city is to balance the need for clean and renewable energy resources with the necessity to protect the public health, safety and welfare of the city, as well as to preserve the integrity, character, property values, and aesthetic quality of the community at large.**

B. <u>Solar Energy Facilities</u>: The city shall allow the construction and operation of solar energy facilities and shall provide standards for the placement, design, construction, modification and removal of solar energy facilities that address public safety, minimize impacts on scenic, natural and historic resources without significantly increasing the cost or decreasing the efficiency of such systems.

1. <u>Roof-Mounted Solar Electric Systems</u>:

a. Roof-mounted solar panels are permitted on buildings and structures in all zoning districts and may include integrated solar panels as the surface layer of the roof structure with no additional apparent change in relief or projection, separate flush mounted solar panels attached to the roof, associated electrical equipment such as meters, charge controllers, inverters, storage batteries, or similar ancillary equipment, or solar photovoltaic shingles;

b. Separate, non-integrated flush-mounted solar panels shall be located on a rear- or side-facing roof, which do not front any street, unless such installation is proven to be ineffective or impractical. If installation is not practical on a rear- or side-facing roof, any other placement in all zoning districts shall be subject to review by the Planning Division;

c. Any roof-mounted solar electric systems proposed on a historic building, or on a building or structure in an established historic district are subject to a Design Review by the Historic District Commission;

d. Separate flush-mounted solar panels installed on a building or structure with a sloped roof surface shall not project vertically above the peak of the roof to which it is attached, or project vertically more than five (5) feet above a flat roof installation;

e. No solar panels shall ever project higher than the permitted building height in any Zoning District;

f. All solar electric systems proposed on the roof of a building shall be uniform in color and match or complement the color of the roof material. All frames (internal and external) shall match the color of the collector surface and all solar panels must have anti-reflective coatings to prevent glare; and

g. All ancillary equipment installed in conjunction with roof-mounted solar electric systems is permitted on the side or rear building facades only. Storage batteries shall be installed in the interior of the building only.

2. Ground-Mounted Solar Electric Systems:

a. Ground-mounted solar electric systems, including standard and pole mounted arrays, are not permitted.

4.89 UT-01: Alternative Energy

This Utility Standards section applies to the following districts:

R4 R5 R6 R7 R8 B1 B2 B2B B2C B3 B4 MX 01 02 P ~~PP~~ TZ2 TZ3

A. Purpose and Intent: The purpose and intent of the city is to balance the need for clean and renewable energy resources with the necessity to protect the public health, safety and welfare of the city, as well as to preserve the integrity, character, property values, and aesthetic quality of the community at large.

B. Wind Energy Facilities: The city shall allow as an accessory use, with review by the Planning Board and/or Historic District Commission, the construction and operation of wind energy facilities and to provide standards for the placement, design, construction, monitoring, modification and removal of wind facilities that address public safety, minimize impacts on scenic, natural and historic resources without significantly increasing the cost or decreasing the efficiency of such systems.

1. Applicability: This section applies to all on-site wind energy facilities. Any physical modification to existing wind energy facilities that materially alters the type, increases the size, or increases the adverse impact on surrounding properties, shall require a review by the Planning Board and/or Historic District Commission.

2. Planning Approval Required:

a. Wind energy facilities shall be limited to the average needs of the structure on the same parcel and shall be a permitted accessory use; subject to the required standards of this section provided they are incidental and secondary to a permitted principal use on the same parcel. The rated capacity of wind energy facilities must correlate with consumption.

b. **Wind energy facilities may be connected to the electrical grid when a parcel on which the system is installed also receives electrical power supplied by a utility company. If a parcel on which a system is installed also receives electrical power supplied by a utility company, excess electrical power generated and not presently needed for on-site use may be used by the utility company in accordance with applicable state and federal law.**

c. **Wind monitoring (anemometer) towers are permitted in all non-residential zoning districts subject to the issuance of a temporary use permit and a building permit. Permanent anemometer towers shall be subject to review and approval in conjunction with wind energy facility.**

d. **No wind energy facility shall be erected, constructed, installed or modified as provided in this section without first obtaining approval from the Planning Board and/or Historic District Commission. The construction of a wind energy facility shall be permitted in non-residential zoning districts as an accessory use subject to the approval of the Planning Board and/or Historic District Commission and provided that the use complies with all requirements set forth in this section.**

   The Planning Board and/or the Historic District Commission have the discretion to deny plans based on aesthetics of the wind energy system.

   All such wind energy facilities shall be constructed and operated in a manner that minimizes any adverse visual, safety, and environmental impacts. No approval of any board or commission shall be granted unless it is found that:

   i. **The specific site is an appropriate location for such use;**
   ii. **The use is not expected to adversely affect the area;**
   iii. **There is not expected to be any serious hazard to people, property or animals from the use;**
   iv. **No nuisance is expected to be created by the use; and**
   v. **Adequate and appropriate facilities will be provided for the proper operation of the use.**

e. **Approvals may also impose reasonable conditions, safeguards and limitations and require the applicant to implement all reasonable measures to mitigate unforeseen adverse impacts of the wind energy facility, should they occur.**

f. **Multiple wind energy facilities may be permitted provided they meet all requirements specified in the Zoning Ordinance and their number and placement is appropriate for the site and is architecturally and visually compatible with the surrounding area.**

3. **General Site Standards:**

a. **Height: No wind energy facility may exceed the maximum permitted or actual legal non-conforming building height by more than 20 ft. in any district**

b. **Noise: Except during short-term events including utility outages and severe wind storms, wind energy facilities shall be designed, installed and operated so that noise generated by the system shall be the lesser of 60 dB as measured at any closest inhabited dwelling or 55 dB at the boundary of any adjacent property line.**

c. **Location:**
   i. **The center of a wind energy facility turbine tower shall be set back no less than 5 feet from all lot lines and rights-of-way or no less than one-half the diameter of the rotor and blades, whichever is greater.**
   ii. **The swept area of wind energy facilities must be set back at least 3 feet from any lot line.**
   iii. **Wind energy facilities may not be located between the front lot line and the front wall of the principal use.**
   iv. **No portion of any wind energy facility's exposed moving parts shall extend to within 20 feet of the ground, or to within 10 feet of any overhead utility lines, or as determined by a utility company.**

d. **Screening: Screening of ground mounted mechanical equipment is required in accordance with Article 4, Section 4.54 SC-01 Screening of the Zoning Ordinance, in order to mitigate aesthetic impacts upon the neighborhood.**

e. **Shadow Flicker: Wind energy facilities shall be sited in a manner that minimizes shadowing or flicker on adjacent properties. The applicant has the burden of proving that this effect does not have significant adverse impacts on neighboring or adjacent uses through siting or mitigation.**

f. **Access and Safety:**

i. **Wind energy facilities shall be designed and installed so as to prevent unauthorized access to electrical and mechanical components and shall be secured or locked at all times when service personnel are not present.**

ii. **Climbing apparatus shall be located in a place that is in accordance with MIOSHA standards as to prevent climbing.**

g. **<u>Removal</u>: Any wind energy facility that has not been used in 180 days, or has otherwise been deter- mined abandoned, shall be removed by the owner and/or operator of the facility. If a wind energy facility has not been removed within 30 days of a deadline specified by the City, the City of Birmingham may remove or secure the removal of the facility at the owner/operator's sole expense. All equipment associated with the facility shall be removed at the same time.**

4. **<u>Design Standards</u>:**

a. **<u>Color and Finish</u>: The Planning Board shall have discretion over the turbine color, although a neutral, non-reflective exterior color designed to blend with the surrounding environment is encouraged. If the site is located within a historic district , the Historic District Commission will have discretion over the turbine color.**

b. **<u>Lighting</u>: Wind Energy Facilities may be lighted only if required by the Federal Aviation Administration. Lighting of other parts of the wind energy facility, or related structures, shall be limited to that required for safety and operational purposes, and shall be reasonably shielded from abutting properties. If lighting is necessary a photometric plan is required.**

c. **<u>Signage</u>: Signs on the wind energy facility shall comply with the requirements of the City of Birmingham's Sign Ordinance, and shall be limited to:**

i. **Wind energy facilities shall not be used for displaying any advertising except for reasonable identification of the manufacturer or operator of the wind energy facility.**

ii. **Those necessary to identify the owner, provide a 24-hour emergency contact phone number, and warn of any danger; and**

iii. **Educational signs providing information about the facility and the benefits of renewable energy**

d. **<u>Utility Connections</u>: All utility connections for and from the wind energy facility shall be located under- ground. Electrical transformers for utility interconnections may be above ground if required by utility provider but must be screened according to the Zoning Ordinance.**

e. **<u>Related Structures</u>: All related structures to wind energy facilities shall be subject to regulations concerning bulk and height of accessory structures as well as all other development standards. All related structures, including but not limited to, equipment shelters, storage facilities, transformers, and substations, shall be architecturally compatible with each other and adjacent buildings and shall be contained within the turbine tower whenever technically feasible. Structures shall only be used for housing equipment for this particular site.**

5. **<u>Submittal Requirements</u>:**

a. **Wind energy facilities are subject to Site Plan Review or Design Review by the Planning Board and/or the Historic District Commission.**

b. **All wind energy facilities shall obtain a building permit, along with any other permits required by federal, state and local agencies, prior to erecting a system.**

c. **<u>Proof of Liability Insurance</u>: The applicant shall be required to provide evidence of liability insurance in an amount and for a duration sufficient to cover loss or damage to persons and structures should there be a failure of the wind energy facility.**

d. **<u>Site Control</u>: At the time of application for a Site Plan Review, the applicant shall submit documentation of actual or prospective control of the project site sufficient to allow for installation and use of the pro- posed facility. Documentation shall also include proof of control over setback areas and access roads, if required. Control shall mean legal authority to prevent the use or construction of any structure for human habitation within the setback areas.**

e. **<u>Site Plan</u>:**

i. **A site plan signed and sealed by a licensed engineer, of the subject property and all properties within 200 feet showing existing buildings and structures, utility lines and poles,**

landscaping and all other items which may effect the placement of the wind energy facility.

ii. **An elevation drawing of the proposed location of the wind energy facility.**

iii. **Color photographs and an elevation drawing with the wind energy facility and all necessary equipment superimposed in the proposed location.**

iv. **Specification sheets for all equipment, identifying all parts of the system, including, but not limited to, the manufacturer and model, turbine, tower height and type, rotor diameter, foundation, any accessory equipment, and the manufacturers electrical plans and specifications.**

v. **Any other information or evidence required by City Officials.**

ORDAINED this _____ day of _____, 2021 to become effective upon publication.

_____

Pierre Boutros, Mayor

_____

Alexandria Bingham, City Clerk

CITY OF BIRMINGHAM
REGULAR MEETING OF THE PLANNING BOARD
WEDNESDAY, JULY 22, 2020
Held Remotely Via Zoom And Telephone Access

Minutes of the regular meeting of the City of Birmingham Planning Board held on July 22, 2020. Chairman Scott Clein convened the meeting at 7:35 p.m.

A. Roll Call

Present: Chairman Scott Clein; Board Members Robin Boyle, Stuart Jeffares, Bert Koseck, Daniel Share, Janelle Whipple-Boyce, Bryan Williams; Alternate Board Members Jason Emerine, Nasseem Ramin; Student Representative Rachel Hester

Absent: Student Representative June Lee

Administration: Jana Ecker, Planning Director
Eric Brunk, IT Manager
Nicholas Dupuis, City Planner
Laura Eichenhorn, Transcriptionist

07-86-20

B. Approval Of The Minutes Of The Regular Planning Board Meeting of July 8, 2020

Motion by Mr. Boyle
Seconded by Mr. Koseck to approve the minutes of the Regular Planning Board Meeting of July 8, 2020 as submitted.

Motion carried, 7-0.

ROLL CALL VOTE
Yeas: Boyle, Koseck, Whipple-Boyce, Williams, Share, Clein, Jeffares
Nays: None

07-87-20

C. Chairperson's Comments

Chairman Clein welcomed everyone to the meeting and reminded everyone that the meeting was being held under the guidance of the City Attorney and City administration to ensure compliance with Governor Whitmer's executive orders. Chairman Clein then reviewed procedures for the meeting.

07-88-20

D. Review Of The Agenda

APPROVED

There were no changes to the agenda.

07-89-20

E. Study Session Items

1. Glazing Requirements

City Planner Dupuis reviewed the item and Kreg Hatfield, from Guardian Glass, was present to answer questions.

Mr. Hatfield explained that:

- All manufacturers calculate VLT and reflectivity percentages in the same way.
- Most people would be unlikely to notice the difference between 66% and 80% VLT.
- When glass gets into the range of 40-50% VLT it tends to begin to look less clear. Tinting would reduce the VLT even further.
- The glass make-up at the Brookside development and the glass make-up at the Daxton Hotel have identical coatings on the glass. The difference is that the Brookside development used a basic clear glass while the Daxton used a low iron glass. The Brookside glass has a VLT of 68% and the Daxton has a VLT of 70% because removing some iron makes glass a bit more clear.
- Glass can be rated in terms of reflectivity both from the inside-out and from the outside-in. It is important to keep those percentages about the same.
- For basic, first floor applications the ordinance should include language about prohibiting tinted glass. There would be no way for property owners to meet the proposed ordinance requirements if they have both tinted glass and low-e coating.
- There would likely be no need to mention low iron glass because it would meet ordinance requirements should a property owner choose to use it. Low iron glass tends to cost significantly more than regular clear glass. It also tends to be a bit more efficient in terms of retaining the heating and cooling of the building's interior.
- Clear glass tends to have a bit of a green hue versus low iron glass. For protection three coats of silver were added to the library windows' glass, and those layers of silver also add a bit of a greenish hue. If the library had used low iron glass with the same layers of silver the green tint would still be present but not as substantially.
- Low iron glass is widely enough available that no property owners would have a difficult time sourcing it should it be required by ordinance. Cost would be the biggest reason not to require low iron glass via ordinance.
- He has not heard of any municipality requiring low iron glass in their ordinances.
- Any glass sample from an architect submitted to the City should specify whether it is low iron glass.
- The Brookside development is the best example of what kind of glass would be permissible under the proposed ordinance language. Brookside's glass is regular clear glass and not low iron.

Mr. Share said the Board should probably not require low iron glass, especially in a time when the City is trying to help retailers weather the financial impacts of the Covid-19 pandemic.

APPROVED

In reply to Mr. Koseck, Planning Director Ecker stated that the ordinance does not specify how many feet from a window shelving must be placed. She said there could be some value in adding that to the ordinance.

City Planner Dupuis said it might also be worthwhile to consider a vertical height limit for shelving if a horizontal one is added.

Mr. Koseck suggested that some of the language could be clarified in Article 3, Section 3.04 of the ordinance. He said 'bronze' should probably be struck from that section.

Ms. Whipple-Boyce concurred with Mr. Koseck regarding removing the word 'bronze'. She said she agreed that it might be useful to have a horizontal distance requirement for how far shelving must be from a window. She said a typical aisle's width might be the appropriate distance. She said it would also be helpful to know the cost difference between low iron and clear glass.

City Planner Dupuis asked how the Board might want a horizontal distance requirement to deal with retail items displayed in a window.

Ms. Whipple-Boyce said that if retailers displayed their merchandise attractively in their windows she would be supportive of that.

Mr. Williams said the Board should come up with language regarding displaying merchandise in windows and shelving before it goes to a public hearing.

In reply to Chairman Clein, Planning Director Ecker said that the ordinance's current restrictions against shelving in the windows work well and are generally enforceable. She said that any examples that seem to be in egregious violation of that standard tend to have existed before the ordinance went into effect.

Mr. Jeffares recommended the Board conclude its discussion about glazing without trying to presently integrate new topics. He noted the Board had been studying glazing for months and had worked hard to prepare for the review, and thought the other topics being raised deserved a similar amount of thoroughness at a future date.

Mr. Koseck said he would be fine with Mr. Jeffares' recommendation that questions of shelving and merchandising in windows be discussed further at a later date.

The Board asked Planning Director Ecker to add 'no tint' and 'low iron glass' to the definition of clear glazing, with the understanding that 'low iron' could possibly be removed after discussion at the public hearing.

Motion by Ms. Whipple-Boyce
Seconded by Mr. Koseck to set a public hearing on August 26, 2020 to consider Zoning Ordinance amendments to Article 3, Section 3.04(E), Article 4, Section 4.90(A) and Article 9, Section 9.02 to change the Clear Glazing standards and definition to require low iron glass, no tint, to relax the Visual Light Transmittance requirements and to add reflectivity requirements.

APPROVED

Mr. Share said he was in favor of moving the topic to a public hearing and not in favor of mandating low iron glass.

Motion carried, 6-1.

ROLL CALL VOTE
Yeas: Whipple-Boyce, Koseck, Williams, Boyle, Clein, Jeffares
Nays: Share

Mr. Boyle echoed Ms. Whipple-Boyce's previous statement that the Board should have comparative costs for low iron and clear glass to review. He said the Board should be aware how a low iron requirement might be layering on costs to development in the City.

Chairman Clein thanked Mr. Hatfield for sharing his expertise with the Board.

2. **Solar Panel Review Process**

City Planner Dupuis reviewed the item.

Ms. Whipple-Boyce said she recently encountered a large solar battery in some work she was doing in another community, and cautioned that the Board might not want to allow any and all ancillary equipment for solar panels to be outside the home given the potential range of sizes.

Mr. Williams said he was fine with solar panels but might be less fine with ancillary equipment on the side of a home given that it might be more prominent in a neighbor's view.

City Planner Dupuis asked if Mr. Williams would prefer the ancillary equipment to be mounted only to the rear of the home, or to possibly be screened in some way.

Mr. Williams said he was not sure what the best approach would be. He said he thought it would depend on the house, the location of the neighboring properties, and the type of equipment.

Planning Director Ecker said that moving the equipment to the rear of a home would have the benefit of being further from a neighbor's yard because of the greater required setback. She noted that, in contrast, equipment on the side of a home might be only five feet from the property line.

Ms. Whipple-Boyce agreed that placement would depend on the size of the equipment. She said that a small electric meter or connection into the house to the battery need not be limited to the rear or interior of a home, whereas larger equipment should be. She said that the Board could likely specify appropriate locations with more information on the most commonly used kinds of equipment.

City Planner Dupuis said he could find pictures of the City's most recent solar panel approvals to provide the Board with a better sense of the size of the ancillary equipment.

APPROVED

Mr. Jeffares noted how helpful it was to have Mr. Hatfield consulting the Board during their glazing discussion, and said it would be equally helpful to find someone as well-versed in solar power technologies. He observed that the Board was doing some guesswork in the current discussion and thought it would be better to get more specific answers. He said that consulting with someone knowledgeable in the field would have the additional benefit of informing the Board on how the technology is trending, so they could factor those considerations into the ordinance language as well.

Mr. Williams agreed with Mr. Jeffares. He said that the proposed language regarding ancillary equipment was likely too vague and should be clarified before being advanced to a public hearing.

Ms. Whipple-Boyce said she could email City Planner Dupuis some contact information for someone who might know more about solar power technology.

07-90-20

F. Miscellaneous Business and Communications:

a. Communications

b. Administrative Approval Correspondence

City Planner Dupuis explained that the owners of 266 Elm Street wanted to remove the patio in the rear of their building, to replace it with exposed aggregate, to add eight planters, and to replace the rear fence. He noted that the exposed aggregate would go all the way to the rear fence which would result in the removal of some amount of landscaped area.

Consensus of the Board was to grant administrative approval for the plans.

c. Draft Agenda for the next Regular Planning Board Meeting (August 12, 2020)

- **Master Plan Draft Review**

d. Other Business

07-91-20

H. Planning Division Action Items

a. Staff Report on Previous Requests

b. Additional Items from tonight's meeting

07-92-20

I. Adjournment

APPROVED

No further business being evident, the Chairman adjourned the meeting at 8:44 p.m.

Jana L. Ecker
Planning Director

APPROVED

CITY OF BIRMINGHAM
REGULAR MEETING OF THE PLANNING BOARD
WEDNESDAY, JANUARY 8, 2020
City Commission Room
151 Martin Street, Birmingham, Michigan

Minutes of the regular meeting of the City of Birmingham Planning Board held on January 8, 2020. Chairman Scott Clein convened the meeting at 7:30 p.m.

A. ROLL CALL

Present: Chairman Scott Clein; Board Members Stuart Jeffares, Bert Koseck, Daniel Share, Janelle Whipple-Boyce, Bryan Williams (left 7:32 p.m.); Alternate Board Members Jason Emerine, Nasseem Ramin

Absent: Board Member Robin Boyle

Administration: Jana Ecker, Planning Director
Nicholas Dupuis, City Planner
Nicole Ciurla, City Planner
Laura Eichenhorn, Transcriptionist

01-01-20

B. Approval Of The Minutes Of The Regular Planning Board Meeting of December 11, 2019

Motion by Mr. Williams
Seconded by Ms. Whipple-Boyce to approve the minutes of the Regular Planning Board Meeting of December 11, 2019 as submitted.

Motion carried, 5-0.

VOICE VOTE
Yeas: Share, Williams, Clein, Jeffares, Whipple-Boyce, Koseck
Nays: None
Abstain: Emerine, Ramin

01-02-20

C. Chairperson's Comments

Chairman Clein explained standard Planning Board meeting procedures and when the public would have opportunity to comment on items before the Board.

01-03-20

D. Approval Of The Agenda

APPROVED

There were no changes to the agenda.

01-04-20

E. Preliminary Site Plan Reviews

1. 770 S. Adams (existing office building) – Request for Preliminary Site Plan approval for construction of a new five story mixed use building in the MU3/MU5 zone of the Triangle District (Postponed from December 11, 2019).

Mr. Williams stated that his law firm, Dickinson Wright, represents MD Properties which owns the building immediately to the south of 770 S. Adams. He explained that in order to avoid any conflict of interest he would be recusing himself.

Mr. Williams departed the meeting at 7:32 p.m.

Planning Director Ecker presented the item.

In reply to Ms. Whipple-Boyce, Ross Hoekstra with McIntosh Poris Associates explained that they were not pursuing angled parking off of the alley per Ms. Kroll's recommendation because it takes up more space than the proposed parking design.

Ms. Whipple-Boyce noted angled parking could be a safety benefit by encouraging drivers to pull out and proceed in the correct direction down the one-way alley. She also noted that the plans as submitted provide for parking over the required amount, so that losing a few spaces in order to install angled parking should not necessarily present the applicant with an issue.

Michael Poris with McIntosh Poris Associates stated that angled parking would make those spaces inaccessible to cars entering the alley from N. Worth Street, since the alley is two-way until the last 40 feet closest to N. Adams Road.

Rick Rattner, attorney for the project, said he would like to be able to go before other City Boards with the Planning Board's opinion on the record regarding this project's alley-setback issue. He suggested that this alley should be treated as alleys are treated in the downtown district, with no sideyard setback required. Mr. Rattner asked that the required setback of the building be measured from the center of the alley instead. He explained that this project would greatly benefit the City in terms of helping develop the Triangle District, and that requiring the building to step back any further would be prohibitive to the building's development.

Seeing no further comment from the applicant team, Chairman Clein invited public comment.

Dr. Mitchell Shek spoke as one of the owners of Birmingham MD Properties, located at 800 S. Adams. He emphasized the importance of maintaining the parking lot's ingress, egress, and accessible parking for his practice's patients. He said he looked forward to working with the applicant team to make sure this is accomplished, and that he just wanted that information included in the public record.

APPROVED

Seeing no further public comment, Chairman Clein returned the discussion to the Board.

Mr. Share said it would be helpful to know where the one-way ends in the alley in order to determine the best parking configuration for the project.

Chairman Clein commended the applicant team on the changes made since the previous review of the project. He said his only concerns were making the direction of traffic within the alley clear and making the parking layout beneficial for visitors to both 700 and 800 S. Adams. He said that angled parking, per Ms. Kroll's and Ms. Whipple-Boyce's suggestion, could be a good way to achieve those goals.

Mr. Emerine said that determining where the one-way begins in the alley, where it ends, and whether those aspects would be best designated by striping, signage or both would be a matter for the City's Engineering Department to determine. He agreed that the angled parking could be a good idea and would likely cause the applicant to lose two of the currently laid out retail parking spots.

Planning Director Ecker noted that the Engineering Department provided comments on the project indicating their opinion that the entirety of the alley is one-way, and that traffic flows from east to west.

Chairman Clein suggested that since this was a preliminary site plan, the plan could be approved with requirements to further consider angled parking, to work with the site's neighbors on mutually beneficial parking designs, and to conform with the Engineering and Police Department comments related to the alley.

Mr. Emerine noted that the furthest west parking spaces, closest to the wall, would be difficult to pull into even if the current parking design were maintained. He also said that if a vehicle were proceeding the wrong way down the alley, and another vehicle were to back out of one of those spaces, it would have a high likelihood of resulting in a collision. He said, as a result, that even if the current perpendicular parking design were maintained he would likely request that the applicant remove one or two of those furthest west parking spaces. That would mean that the applicant faces a loss of two parking spaces whether they maintain the current parking layout or switch to the recommended angled parking.

Mr. Koseck said the angled parking spaces would likely increase the safety of parking and driving in the alley.

Chairman Clein spoke to Mr. Rattner's earlier question about the alley setback. Chairman Clein explained that in his work in Detroit his projects use the middle of the alley for calculation of the correct setback. He said in this particular case he had no concerns with regard to the layout of the setback, that it is an example of fine urban planning, and that he would be pleased to see the project moved forward with that consideration.

APPROVED

Mr. Emerine echoed Chairman Clein's comments, saying that cities like Ferndale and Northville do the same thing for calculating setbacks on alleys, and that measuring from the middle is a pretty standard way of doing so.

Mr. Poris asserted that the ordinance says that frontage on a right-of-way determines a front yard which results in a different setback calculation than a side yard designation. He said the frontage on the alley in this case should result in a front yard setback.

Motion by Mr. Share
Seconded by Ms. Whipple-Boyce to approve the Preliminary Site Plan Review for 770 S. Adams with the following conditions: 1. Revisions to the south side setbacks of the building or removal of windows within 10' of the property line, or obtain a variance from the Board of Zoning Appeals; 2. Correction of all site, landscape, elevations, streetscape and engineering plans showing consistency on all, and demonstrating that all zoning requirements have been met; 3. The addition/clarification of 43 bike racks on site; 4. A photometric plan and material samples and specifications will be required at Final Site Plan and Design Review; 5. Compliance with the requirements of all departments; and, 6. The conversion of parking spaces fronting on the alley to be angled so that the front of the vehicle would be facing northwest.

Mr. Share added that if the motion passes it should be clear that the Planning Board sees the project as worthwhile, and the minutes should accurately reflect that for the benefit of the Board of Zoning Appeals.

Motion carried, 7-0.

VOICE VOTE
Yeas: Share, Whipple-Boyce, Clein, Emerine, Jeffares, Koseck, Ramin
Nays: None

01-05-20

F. Study Session Items

1. 2019 Administrative Approval Report

Planning Director Ecker presented the item.

Chairman Clein invited the Planning Department to keep the Planning Board updated on any frequently appearing administrative approval matters that would be worth further Planning Board discussion.

Planning Director Ecker confirmed that, when they arise, frequently appearing matters are brought to the attention of the Planning Board for potential future discussion, such as the issue of solar panels which will be discussed by the Board later this evening.

APPROVED

2. Master Plan Review Process Update

Planning Director Ecker presented the item. She explained that the City Commission approved the proposal as submitted with the exception that the schedule would start in February 2020, and not January 2020. She stated that in December 2019 the City Commission approved the expenditure of up to $28,600 for additional public engagement activities. That figure included the potential for two different round-table discussions, a drop-in clinic, and two additional short surveys. Should the Board want to pursue any of those options, they would make a recommendation to the City Manager who would disburse the requisite funds should he approve of the recommendation.

Planning Director Ecker said the scheduled Planning Board master plan discussions would be publicized on the City's website, the Master Plan website, and all City social media channels. Sarah Traxler, one of the local members of the Master Plan team, would likely be attending each meeting and giving a presentation of the evening's master planning topic. Those presentations would also be included in the Planning Board's agenda packets the Friday before their Wednesday meetings in order to afford both the public and the Board members time to review the topic. Robert Gibbs, another local member of the Master Plan team, would likely also be present at the meetings.

Planning Director Ecker said that between sessions she would collect any master plan comments submitted to the Planning Department and include them in the agenda packet for the next scheduled master plan meeting so that the Board would have an opportunity to review those as well.

3. Solar Panel Review Process

City Planner Dupuis presented the item.

Mr. Emerine noted that on page 620 of the Planning Board's agenda packet, 4.88 B said 'wind' when it should read 'solar'.

City Planner Dupuis agreed and said he would make the change. He further explained:

- Ancillary solar panel equipment is very small and would be mounted to the wall of whatever building is using it. He said it would be visually unobtrusive and that he had not come across any information on undue noise production by the equipment. He said he would bring the spec sheets for the ancillary equipment to a public hearing once scheduled which would provide both the Board and the public with more information on the items.
- He would clarify the suggested language to explain that the 40 square foot limit on a solar panel system counts all connected panels as part of one system. Since the average solar panel is three-and-a-half feet by five feet, he recommended the 40 square foot limit in order to allow two average-sized solar panels. City Planner Dupuis said he provided the 40 square feet to begin the conversation, and also proposed the number because he was unsure whether it would be appropriate in a residential setting to have more than 40 square feet of solar panels. He noted that some other cities restrict solar panels to occupying no more than a certain percentage of a given lot.

APPROVED

- Ground mounted solar panels could enable residents who do not want to mount panels on their roof to still have access to some solar power. Ground mounted solar panels would also allow businesses to use solar-powered trash compactors.

Ms. Whipple-Boyce said that she did not yet know enough about ground-mounted solar panels, but that if the City proceeded toward allowing them she would prefer that their allowable yard coverage be calculated by percentage and not by a set amount. She also told City Planner Dupuis that there had been a conversation regarding wind energy facilities about ten years hence, and that if he could find the minutes from that conversation it might help provide some useful information on the topic.

Mr. Koseck said the Board might want to consider not allowing solar panels at grade because it could encourage residents to do away with any greenery that could get in the way of the panels. He also said that 40 square feet of solar panels on the ground might not be enough to generate a worthwhile amount of energy. Mr. Koseck added that solar panels are impervious which would also raise ordinance issues in terms of ground cover. Since most people would likely rather not install solar panels at grade anyways, Mr. Koseck said he would just as soon prohibit it to avoid these issues since the potential environmental gain would likely not be significant in those cases.

Mr. Jeffares echoed Mr. Koseck's concerns about ground mounted solar panels and said he would prefer to continue studying that possibility and whether it would be worthwhile.

Ms. Ramin noted that on page 625, in section G, the phrase "If a wind energy facility has not been removed within 30 days a deadline specified by the City" would need to be clarified.

Mr. Share noted that on page 621, Item F, the word should be 'complemented', not 'complimented'. He agreed with Mr. Koseck and Mr. Jeffares that ground mounted solar panels were likely not necessary to pursue at this time.

Chairman Clein expressed agreement with Mr. Koseck, Mr. Jeffares, and Mr. Share regarding ground mounted solar panels.

In reply to Chairman Clein, City Planner Dupuis said he would do more research on the benefits and drawbacks of the anti-reflective coating some other cities' ordinances require for solar panels.

4. Glazing Standards

City Planner Dupuis presented the item.

Mr. Koseck said he had a list of two or three people he would be reaching out to soon who might be able to contribute meaningfully to the glazing standards conversation. He said that once he had done that he would loop City Planner Dupuis in as appropriate.

Chairman Clein explained that in February 2020 and April 2020 there will only be one Planning Board meeting per each month and that both of those meetings are dedicated to master plan discussion. He suggested that Board members look at their calendars to see if a special meeting could be scheduled to wrap up some of these other study session topics. He added that even if

APPROVED

the Board moved forward with a resolution on this item during the present meeting, due to noticing requirements the public hearing would not occur until the second meeting in March 2020. Chairman Clein recommended the Board take the time to do adequate research, as a result, before moving further forward on this.

Mr. Emerine suggested it might be worthwhile to speak with glass contractors in addition to glass vendors in order to get more insight.

Planning Director Ecker said she would recommend reaching out to a mechanical engineer, a glass vendor or supplier, and a glass contractor or installer.

City Planner Dupuis confirmed he would reach out to people who work with glass regularly in architectural settings and would return to the Board with further information.

01-06-20

G. Miscellaneous Business and Communications:

a. Communications

b. Administrative Approval Correspondence

c. Draft Agenda for the next Regular Planning Board Meeting (January 22, 2020)

- Whistle Stop Design Review
- 35001 Woodward - Amended CIS and Amended Preliminary Site Plan
- Fred Lavery Porsche SLUP
- Two small solar panel items

d. Other Business – Discuss amending Rules of Procedure for January 22, 2020 meeting

Motion by Ms. Whipple-Boyce
Seconded by Mr. Share to amend the Rules of Procedure for the Planning Board's January 22, 2020 meeting to allow for the review of the above items as described by Planning Director Ecker.

Motion carried, 7-0.

VOICE VOTE
Yeas: Whipple-Boyce, Share, Emerine, Clein, Jeffares, Ramin, Koseck
Nays: None
Abstain: Emerine, Ramin

APPROVED

01-07-20

H. Planning Division Action Items

a. Staff Report on Previous Requests
b. Additional Items from tonight's meeting

01-08-20

I. Adjournment

No further business being evident, the Chairman adjourned the meeting at 9:11 p.m.

Jana L. Ecker

Planning Director

APPROVED

BIRMINGHAM CITY COMMISSION / PLANNING BOARD JOINT WORKSHOP SESSION
JUNE 17, 2019
DPS FACILITY, 851 SOUTH ETON
7:30 P.M.

I. CALL TO ORDER AND PLEDGE OF ALLEGIANCE

Mayor Patty Bordman called the meeting to order at 7:30 PM.

II. ROLL CALL

Commission
ROLL CALL: Present: Mayor Bordman
Commissioner DeWeese
Commissioner Harris
Commissioner Hoff
Commissioner Nickita
Commissioner Sherman

Absent: Mayor Pro Tem Boutros

Planning Board
ROLL CALL: Present: Chairman Scott Clein
Robin Boyle
Stuart Jeffares
Nasseem Ramin, alternate
Daniel Share
Janelle Whipple-Boyce
J. Bryan Williams

Absent: Jason Emerine, alternate
Bert Koseck
Sophia Trimble, student representative
John Utley, student representative

Administration: City Manager Valentine, Deputy City Clerk Arft, Planning Director Ecker, Building Official Johnson, City Planner Cowan

III. ITEMS FOR DISCUSSION

City Manager Valentine said the objective tonight was to provide discussion items in order to clarify how the City should move forward on the following issues.

A. Current Issues:

1. Discussion on solar panel regulations

Planning Director Ecker reviewed the item. She emphasized that solar panel can now be integrated, so that aesthetics are not as big an issue. In reply to Commissioner Hoff, Planning Director Ecker stated that in the past six months there have been eight requests for solar panels. Residents have been paying a fee of $400 for design review plus a sign bond of $100 if the solar

panels are going to be installed on the front of their homes, and have been paying $100 for an administrative review if the solar panels are to be installed on the back of their homes.

Planning Director Ecker confirmed for Commissioner DeWeese that comments from the public have been positive.

Commissioner Nickita stated his only concern would be obtrusive-looking solar panels, which he said would be caught by staff during administrative review. He suggested that those examples could be brought to the Planning Board for review, while the more subtle installations could be administratively approved.

Mr. Jeffares said solar panels are part of the future of ecologically-sustainable building, and that Birmingham should be doing whatever it can within reason to encourage their use. He also mentioned that currently the shingle model of solar panels are twice as expensive as the panel models and are one-third less effective. He said he anticipates the shingle model of solar panels will become more efficient over time.

Seeing no public comment, Mayor Bordman acknowledged consensus that the Planning Board should re-study the issue.

Chairman Clein asked whether the Planning Board should be studying the application process for solar panels or the design standards.

City Manager Valentine said the Commission would be formally amending the Planning Board action list in the near future to provide specific direction on any recommended study items from this meeting.

Mayor Bordman expressed appreciation for Chairman Clein's clarifying question, and said she would personally like to see both topics studied though the final study direction would come from the Commission as a whole.

2. Discussion on enclosing balconies, patios and terraces

Planning Director Ecker presented the item. She clarified for Commissioner Hoff that some of these situations are being enclosed as three-season rooms and some are not.

Commissioner Hoff observed that the changes being made to these buildings were reasonably significant as they resulted in a change of the building footprint.

In reply to Commissioner Harris, Planning Director Ecker stated the President of the Crosswinds association has called the Planning Department multiple times to express his displeasure with these enclosures. She noted that despite the President's displeasure the same association did vote to allow these enclosures on their building. She stated this has been the only contact the City has received from the public on the matter.

Commissioner Nickita said while these examples happen to be high-quality, if the City allows enclosures in general the results could also be of lower quality. He said the City must create appropriate design standards for these enclosures, must consider the footprint expansion these

enclosures can represent, and must consider the impact on the owners of neighboring condominiums as these enclosures would suddenly significantly impair their view.

Commissioner DeWeese said that any enclosures should be required to equal or improve upon the quality and aesthetic of the building they are being added to. He said that enclosures which add to the footprints of buildings, are prominent in some way, or are over public space should also be carefully reviewed. More minor changes could be administratively reviewed.

Planning Director Ecker confirmed that the City's process is to administratively review minor changes of these types and to receive Planning Board review for more significant changes.

Commissioner DeWeese reiterated that the quality of the enclosure and the size of impact should also be key considerations for whether a project is administratively reviewed or is sent to the Planning Board.

Commissioner Hoff emphasized the need to review the likely impact of enclosure installations on neighbors in multi-family buildings and the zoning impacts that could result from adding enclosures to balconies of single-family homes.

Mr. Share said it would also be necessary to consider whether these enclosures face courtyards or streets in terms of determining their potential impact.

Mayor Bordman observed the consensus to have the Planning Board study the issue.

3. Discussion on criteria for Administrative Approval process

Planning Director Ecker presented the item.

City Manager Valentine said this item stemmed from the perception that there should be more public input regarding what might be a minor or major change to a building.

Commissioner Nickita suggested the ordinance languages could be amended to ensure items which have a history of public engagement go through the Planning Board review process, while more minor items can continue to be administratively reviewed.

Commissioner Hoff noted the subjective nature of deciding what is a minor or major change. She stated her inclination would be to provide a way for neighbors to share their opinions.

In reply to Commissioner Hoff, Planning Director Ecker explained that if a change is not administratively approved a property owner would have the right to go to the Planning Board for a site plan review. She also explained that, while there was a situation regarding a development on Frank Street where there was a lot of dialogue between the neighbors and the developer, none of the neighbors ever attended the site plan review discussions. Because no neighbors attended the preliminary or the final site plan reviews, their interests were not presented to the City in the form of whatever possible tacit agreement the neighbors and the developer may have made.

In reply to Commissioner Harris, Planning Director Ecker stated that administratively approved changes are not listed by addresses in the Planning Board agendas, even though the documentation is included in the Planning Board agenda packets. She said including the addresses

that are being administratively approved as part of the Planning Board agendas would be worth considering.

Mr. Boyle said that these applications should be available to the public as a live portable document format (PDF) so that they could be filled out on the computer. He noted that receiving handwritten applications makes review of these items very challenging.

Mayor Bordman said Mr. Boyle's suggestion was a good one and hoped it would be easy for the City to implement. She stated the Planning Board should not have to waste its time trying to decipher handwriting on these documents.

Mayor Bordman continued, echoing Commissioner Hoff's observation that the difference between a minor and major change is subjective. The Mayor shared her confidence in staff's ability to differentiate between more mundane and more controversial changes, but she also noted that sometimes a seemingly mundane change could end up being controversial in a way staff could not anticipate. She asked the Commissioners whether this item should be further considered by the Commission or whether it should remain as-is for now.

Ms. Whipple-Boyce explained that in her 12 years as a Planning Board member, she had never seen an administrative approval inappropriately issued. She said staff solicits Planning Board input when an item is even remotely unusual. Besides for the occasional difficulty of deciphering handwriting, Ms. Whipple-Boyce said she had never seen an issue with the process as it stands, and was surprised to see the topic on the evening's agenda.

Mayor Bordman said her inclination was to leave the process as-is, as hundreds of administrative approvals are performed every year and only one has ever yielded public critique.

Commissioner Sherman said he would be inclined to agree with Mayor Bordman but there seemed to be a difference of opinion regarding what should be subject to design review. He suggested further study of this item could be combined with the discussion of enclosures to clarify what changes are substantial enough to receive design review.

4. Discussion on Master Plan charrette and draft of key proposals

Mayor Bordman asked all commenters to bear in mind that these proposals are still in draft form. There will be further opportunities for citizen input, including another upcoming master plan survey, which will be integrated into the final proposals the master planning team will make.

City Manager Valentine agreed with Mayor Bordman, emphasizing that this is a chance for the Commission and the Planning Board to discuss their observations regarding what they have heard from the master plan process so far.

Planning Director Ecker acknowledged representatives from the Master Plan team present at the meeting.

Chairman Clein said the Master Plan team was doing an excellent job so far. He observed that the master plan process is still in its early phases but has been producing useful information.

Mr. Jeffares told the meeting about a number of projects running in Traverse City, MI to increase its attainable housing stock. Traverse City defines attainable housing as housing appropriate for

people making 60% of the area median income. He explained one of their approaches is a program called PILOT, or Payment In Lieu of Taxes. In that program, a developer sets a lower rent for a certain number of their units and then pays a lump sum payment to Traverse City that is lower than paying property taxes on each unit. Another approach has been for residential developers to purchase a number of parking permits in the City's parking garages in order to provide residences with parking. Mr. Jeffares said he was encouraged by Traverse City's efforts, and said he is excited about Birmingham's continued efforts towards increasing attainable housing for its downtown.

Commissioner Nickita concurred with Chairman Clein, noting that both the charrettes and the master plan process have been well-publicized. He noted that proposed changes to Birmingham's residential parking requirements are being focused on in an attempt to increase Birmingham's attainable housing availability. Having spent the five days prior to this meeting in Louisville, KY with the Congress for New Urbanism (CNU), Commissioner Nickita explained many communities around the country are also attempting to diversify their housing stock. He noted many communities are also focusing on reducing their residential parking requirements in order to broaden the housing types available, and are doing so even more intensively than Birmingham has up to this point.

In response to the concern that developers would not develop residential housing without parking, Commissioner Nickita stated that many communities at CNU have experienced no problems in that area. Buffalo, NY, for instance, has seen great success in attracting new development since the City did away with all parking requirements, for residential and commercial uses, in 2017. While acknowledging that the Buffalo, NY changes are an extreme case, Commissioner Nickita emphasized the benefits Birmingham will likely see from considering new parking ordinance possibilities for the future.

Commissioner DeWeese said he would like to hear ways Birmingham could use other types of non-parking related zoning to incentivize increased development of residential housing stock in the downtown. For example, Commissioner DeWeese suggested a developer could be permitted to create an additional floor beyond the zoning allowances, while maintaining the overall building height, if every floor above the first was developed as residential. This would increase the density of the residences in the building, which would then decrease the costs of each residence.

Mr. Boyle summarized the national attention the Minneapolis 2040 city plan is getting, emphasizing that while their solutions cannot be Birmingham's solutions due to various differences between the municipalities, Minneapolis is grappling with similar goals of increasing both housing diversity and density. Mr. Boyle strongly recommended those present read "Americans Need More Neighbors", a piece by the New York Times editorial board from the June 15, 2019 issue, which explored the Minneapolis City Council's efforts to expand housing options. He concluded by saying he has been truly impressed by Birmingham's Master Plan team.

Mr. Share encouraged those present to be mindful of the Master Plan draft recommendation that Birmingham neighborhoods should be encouraged to each determine their own character, rather than having goals imposed on them by the City's government and committees. Secondly, Mr. Share noted that the Master Plan team found Birmingham had plenty of opportunity for increased residential density in the downtown without raising building heights. Given that, he drew attention to the issue of D5 zoning at Brown and S. Old Woodward, stating that if that area were to be rezoned, adjacent areas could also be rezoned, thus increasing building heights in the downtown

despite the draft finding that Birmingham building heights could remain as-is. He suggested that the Master Plan team could possibly look at that area and advise the City on how to proceed.

Mayor Bordman agreed, citing Mr. Duany's recommendation that Birmingham maintain its building height ordinances. She then invited public comment.

Lisa Brody explained that office space is often described as more plentiful than residential space in Birmingham. She suggested that it is not a surplus of office space causing the increase in people working in the City, but rather a change in office utilization resulting in the increase of the number of individuals usually sharing a single office. As an example, she explained that her office traditionally held three employees, where it now has nine employees working there at various times. She said she sees a similar trend in office usage across Birmingham's downtown.

Mayor Bordman thanked Ms. Brody for her comment.

5. Review of Planning Board Action List

Planning Director Ecker reviewed the item.

Commissioner Hoff said she would like to see the balconies and terraces made a higher priority on the action list.

Commissioner Sherman said a number of items from the evening's discussion were on hold pending the Master Plan. He said an interim action list would be appropriate to prepare.

Mayor Bordman agreed with Commissioner Sherman.

IV. PUBLIC COMMENT

There was no public comment.

V. ADJOURN

Mayor Bordman adjourned the meeting at 8:35 p.m.

NOTICE: Individuals requiring accommodations, such as mobility, visual, hearing, interpreter or other assistance, for effective participation in this meeting should contact the City Clerk's Office at (248) 530-1880 (voice), or (248) 644-5115 (TDD) at least one day in advance to request mobility, visual, hearing or other assistance.

Las personas que requieren alojamiento, tales como servicios de interpretación, la participación efectiva en esta reunión deben ponerse en contacto con la Oficina del Secretario Municipal al (248) 530-1880 por lo menos el día antes de la reunión pública. (Title VI of the Civil Rights Act of 1964).

CITY OF BIRMINGHAM
PLANNING BOARD ACTION ITEMS
OF WEDNESDAY, MAY 22, 2019

Item	#
B. Approval Of The Minutes Of The Regular Planning Board Meeting Of May 8, 2019	3
Motion by Mr. Jeffares **Seconded by Mr. Share to approve the minutes of the Regular Planning Board Meeting of May 8, 2019 as submitted.**	3
Motion carried, 5-0.	
E. Request for Preliminary Site Plan Review	4
1. 35001 Woodward – The Maple – Request for approval of a Preliminary Site Plan to permit the construction of a five story hotel building (Postponed from February 27, 2019).	
Motion by Mr. Williams **Seconded by Mr. Share to receive and file the letter dated May 20, 2019 from Kelly Wiliam Cobb into the official record.**	6
Motion carried, 7-0.	
Motion by Mr. Boyle **Seconded by Mr. Koseck to approve the Preliminary Site Plan for 35001 & 35075 Woodward – The Maple – with the following conditions: 1) The applicant must clarify which refuse areas the two proposed retail uses are permitted to use, and the accessibility of such; 2) Submit specification sheets for the proposed ground mounted and rooftop mechanical units to ensure full screening; 3) Add the correct number of street trees to each street frontage, or obtain a waiver from the Staff Arborist; 4) The applicant must provide the correct number of street lights and provide regular spacing of such by Final Site Plan Review. 5) Submit a photometric plan and specifications on all proposed lighting; 5) The applicant must reduce the width of the garage entry on the west elevation or obtain a variance from the Board of Zoning Appeals; 6) Submit material samples, colors, and specifications as well as details on any proposed signage; 7) Applicant comply with the requests of all City Departments; 8) Applicant obtain approval of a lease agreement by the City Commission for all projections and /or encroachments on City property; 9) Applicant revise plan sheets as necessary to ensure all sheets are consistent and show the required property lines and clearly note all projections / encroachments**	7

APPROVED

across property lines; and 10) At Final Site Plan Review, the applicant must provide the Special Event Operations Plan for the said hotel.	
Motion carried, 7-0.	8
F. Request for Design Review	
1. 1986 Northlawn – Private Residence – Request for design review and approval of the installation of eight solar panels on the front (street) facing portion of the roof of a private single family residence.	9
Motion by Mr. Williams **Seconded by Ms. Whipple-Boyce to move to approve the design plan for 1986 Northlawn.**	10
Motion carried, 7-0.	
G. Miscellaneous Business and Communications: **d. Other business**	10
Motion by Mr. Williams **Seconded by Mr. Koseck to suspend the Rules of Procedure to allow the Site Plan Review for Pernoi at the Planning Board's June 12, 2019 study session.**	
Motion carried, 7-0.	

APPROVED

CITY OF BIRMINGHAM
REGULAR MEETING OF THE PLANNING BOARD
WEDNESDAY, MAY 22, 2019
City Commission Room
151 Martin Street, Birmingham, Michigan

Minutes of the regular meeting of the City of Birmingham Planning Board held on May 22, 2019. Chairman Scott Clein convened the meeting at 7:30 p.m.

A. ROLL CALL

Present: Chairman Scott Clein; Board Members Robin Boyle, Stuart Jeffares, Bert Koseck Daniel Share, Janelle Whipple-Boyce, Bryan Williams; Alternate Board Members Jason Emerine, Naseem Ramin; Student Representative Sophia Trimble, John Utley

Absent: None

Administration: Jana Ecker, Planning Director
Nicholas Dupuis, City Planner
Laura Eichenhorn, Transcriptionist

05-073-19

B. Approval Of The Minutes Of The Regular Planning Board Meeting Of May 8, 2019

Mr. Jeffares noted that the awnings at Sidecar will be replaced, not "repainted" as was indicated on page 5.

Mr. Share asked that in the seventh paragraph, on page six, the information be updated to indicate that the applicant is not operating under the bistro ordinance. Mr. Share also noted a spelling correction on page eight, recommending "reproach" be changed to "re-approach".

Motion by Mr. Jeffares
Seconded by Mr. Share to approve the minutes of the Regular Planning Board Meeting of May 8, 2019 as submitted.

Motion carried, 5-0.

VOICE VOTE
Yeas: Jeffares, Share, Boyle, Whipple-Boyce, Williams
Nays: None
Abstain: Clein, Koseck

APPROVED

05-074-19

C. Chairperson's Comments

Chairman Clein reviewed the evening's agenda.

05-075-19

D. Approval Of The Agenda

No changes.

05-076-19

E. Request for Preliminary Site Plan Review

1. 35001 Woodward – The Maple – Request for approval of a Preliminary Site Plan to permit the construction of a five story hotel building (Postponed from February 27, 2019).

Planning Director Ecker presented the item.

Planning Director Ecker confirmed:

- City Engineer O'Meara has said the applicant's proposed plans for Park Street would not interfere with the City's plans for Park Street.
- The applicant has amended their plans to make them consistent with the City's plans for Maple.
- The applicant is required to have three loading spaces based on use and square footage of building. The spaces are required to be 40 feet long, 12 feet wide, and 14 feet in height.
- The traffic consultant has reviewed the most current plans. The three parking spaces further to the north have also been removed so the hotel may stack cars there if necessary.

Mr. Williams noted that the three spaces to the north which were removed were in front of retail establishments.

Kevin Biddison, architect, told the PB that he had met with the City's Engineering and Planning Departments multiple times in the past month and that the project had undergone a number of adjustments in order to come further into alignment with the City's requirements. He continued:

- The double-banked loading zone would allow the applicant to stack up to 10 cars if needed. Such circumstances would only be likely to occur in the daytime hours.
- The garage door width will be reduced to 25 feet from 30 feet as required.
- The applicant would be more than willing to add the additional tree necessary if the arborist signs off on it. The applicant will also add the additional street lamp required.
- Additional lighting will be added around the building once the building is built and the first round of lighting is installed to illuminate any remaining darker areas.
- The vertical aluminum fins with LED lighting at Maple and Park and Maple and Woodward are being installed to provide visual interest and are cut back into the stone so they will not project into the right-of-way.

APPROVED

Mr. Williams suggested adding the operations plan with the City onto the list of conditions for preliminary. He also cited his previous 'No' vote on the CIS due to safety concerns, and commended the applicant for their efforts towards making the project safer through improved traffic flow and valet parking.

Mr. Koseck agreed with Mr. Williams, saying the applicant had come a long way in terms of improvements made to safety and traffic flow. He also said the hotel would likely need vestibules within the building, but that as long as they were interior it would not affect the site plan.

In reply to a query by Mr. Koseck, Mr. Biddison said the parking spaces on Hamilton are part of the conversation with the Hunter House Group. In addition, there are stairs on the Hamilton side of the building which would allow Hunter House patrons access to some of the additional spaces below grade.

Mr. Koseck said the retention of the 1½ foot wide curbed median on Park Street was a strange decision.

Mr. Biddison said the curb was being maintained at the request of City Engineer O'Meara in order to help drainage along the street. He said he anticipated the conversation with the Engineering Department regarding the curb would continue.

Mr. Boyle acknowledged that with all the competing interests on this site, nothing was going to be perfect but that the applicant's efforts had brought them much closer.

In response to Mr. Boyle, Mr. Biddison explained the rooftop would have seating and a rooftop bar.

Planning Director Ecker advised Mr. Biddison that within the overlay a commercial use could not be located above a residential use. She suggested the rooftop could be used by the residential occupants of the fifth floor of the building.

Mr. Biddison stated that both elevators would be available for resident use in the building. He confirmed a key system would be in use, allowing only residents to access residential floors.

Chairman Clein asked that the applicant confirm the width of the sidewalk in front of Greenleaf Trust and design their sidewalk to match that width.

Mr. Biddison said the five feet sidewalk proposed is what the Engineering Department instructed the applicant to provide.

Mr. Williams said the elevator usage should be reconsidered by the City from a security standpoint since residents may not know all their neighbors, and a non-resident could easily follow a resident out onto a residential floor.

APPROVED

Chairman Clein said he was not as concerned about a potential security issue, and advised that the applicant work the issue out within their own operations and with the City's Building Department. He continued:

- He appreciated the applicant's continued efforts to meet City requirements.
- Seven stacking spaces on Park Street seemed like too many to reserve for the purpose. It would require the City give up too much pedestrian and public space. He said he was not comfortable with it, and that while it might not yield a no vote from him this evening, he would advise the layout be reconsidered for the final.
- There is no reason one line of valet cars should be insufficient, especially with the three extra spaces being made available to the north.
- For the final review he would want to know that the applicant and the City's Engineering Department are creating good design for these conditions, and not just what works.
- This should look like a valet operation, which would take up little more space than parallel parking, instead of a double-stack for cars.

Mr. Williams said he agreed with Chairman Clein's concerns, but that he would also not want to see cars unable to move on Maple. He said the City might have to change some of its plans if it wants to allow reasonable development on this site.

Mr. Boyle recommended the applicant discuss the possibility of renting some of the space within the small parking lot near the hotel on Park Street, which would reduce some of the need to have extra street space for stacking cars.

Chairman Clein noted the applicant would have to speak to the City about its lease of the City's property, so it should also raise the question of renting that parking lot space per Mr. Boyle's recommendation.

Mr. Biddison said the applicant would be open to the conversation.

Mr. Koseck said he also believed it would be a good idea to explore with the City.

Chairman Clein recommended adding a letter dated May 20, 2019 from Kelly William Cobb, Vice-President of Hunter House Hamburgers to the official record. He summarized the letter as notifying the PB of the applicant's contractual obligations to Hunter House as related to the development. Noting that the issues raised by the letter were not in the PB's purview, Chairman Clein said it was still helpful to understand where the negotiations stand and extended his appreciation for the letter to Mr. Cobb.

Motion by Mr. Williams
Seconded by Mr. Share to receive and file the letter dated May 20, 2019 from Kelly William Cobb into the official record.

Motion carried, 7-0.

VOICE VOTE
Yeas: Williams, Share, Jeffares, Boyle, Whipple-Boyce, Clein, Koseck
Nays: None

APPROVED

Mike Kopmeyer, 1351 Bennaville Ave, said he would like to see more green space in this plan. He said he would like to see some amount of the space set aside for a public park, and that in a perfect world Birmingham would not have a four or five story building on that lot. He said as a compromise it would be good if there could be areas shaded by trees which are public and allow for people to gather. He also said he endorsed Chairman Clein's concerns with the planned double-stacked space on Park Street.

Mr. Kopmeyer continued that the frontage along Woodward seemed cold and not conducive to pedestrian usage and activity. He suggested that awnings or more masonry or other options could make that frontage seem more human-scale and approachable.

Mr. Boyle commended the applicant and architect on all the work they have done. He said he would like the applicant to review the stacking plans on Park Street. He added that, along the lines of Mr. Kopmeyer's comments, Mr. Boyle was keen to see the proposed building materials at the final site plan.

Mr. Williams suggested it would be prudent for Chairman Clein to participate in some of the operation discussions between the applicant and the City since he could best represent the PB's concerns about traffic flow and parking. He noted that while Planning Director Ecker is a capable intermediary between the PB and the applicant, the PB's recommendations should be directly conveyed by Chairman Clein due to the specificity of the Board's concerns.

Mr. Share said he would also dislike the double-stacking if not for the extreme public safety risks that could result should traffic not be managed efficiently at this intersection. He noted that the hotel could handle up to 120 vehicles for events, and that a dangerous situation would likely compound very quickly if hotel traffic is not adequately controlled. He said he would be satisfied if the Engineering Department and the City's traffic consultant confirmed that high-volume hotel traffic could be managed with single-stacking and a healthy margin of safety. Otherwise, he said double-stacking is a reasonable, although not ideal, condition to accept.

Mr. Boyle recommended the applicant consider different options for signage as it moves towards its Final Site Plan Review, specifying that it should avoid the signage issue that the Greenleaf Trust building has.

Motion by Mr. Boyle
Seconded by Mr. Koseck to approve the Preliminary Site Plan for 35001 & 35075 Woodward – The Maple – with the following conditions: 1) The applicant must clarify which refuse areas the two proposed retail uses are permitted to use, and the accessibility of such; 2) Submit specification sheets for the proposed ground mounted and rooftop mechanical units to ensure full screening; 3) Add the correct number of street trees to each street frontage, or obtain a waiver from the Staff Arborist; 4) The applicant must provide the correct number of street lights and provide regular spacing of such by Final Site Plan Review. 5) Submit a photometric plan and specifications on all proposed lighting; 5) The applicant must reduce the width of the garage entry on the west elevation or obtain a variance from the Board of Zoning Appeals; 6) Submit material samples, colors, and specifications as well as details on

APPROVED

any proposed signage; 7) Applicant comply with the requests of all City Departments; 8) Applicant obtain approval of a lease agreement by the City Commission for all projections and /or encroachments on City property; 9) Applicant revise plan sheets as necessary to ensure all sheets are consistent and show the required property lines and clearly note all projections / encroachments across property lines; and 10) At Final Site Plan Review, the applicant must provide the Special Event Operations Plan for the said hotel.

Motion carried, 7-0.

VOICE VOTE
Yeas: Boyle, Koseck, Williams, Share, Jeffares, Whipple-Boyce, Clein
Nays: None

05-077-19

F. Request for Design Review

1. 1986 Northlawn – Private Residence – Request for design review and approval of the installation of eight solar panels on the front (street) facing portion of the roof of a private single family residence.

City Planner Dupuis presented the item.

Mr. Williams asked why the ordinance did not allow solar panels on the front of homes without Planning Board approval.

Planning Director Ecker said she was unsure as to the exact reason, but it is likely aesthetics.

Mr. Jeffares said that traditional solar panels can be aesthetically obtrusive, and noted that several manufacturers have recently started producing solar panels which resemble roofing shingles. While he stated that he was unsure if there were other reasons that the smaller solar panels could not be used, for instance cost or output, he said they are generally nicer to look at than traditional solar panels.

Ms. Whipple-Boyce reminded the PB that they granted a similar front-of-roof solar panel installation for a home on Lincoln a few years prior, and that it yielded a fine result.

Mr. Boyle asked how much the City charged for this review.

City Planner Dupuis said it was $500 total.

Mr. Boyle said granting this resident request would be the easiest thing in the world to do to encourage ecological sustainability. He suggested that residents adding solar panels to their houses should incur no design review fee and a simple approval process.

APPROVED

Planning Director Ecker stated that the Planning Department could allow solar panel installations through administrative approval for $100 if the Planning Board no longer wants to review the majority of such requests.

Chairman Clein said the Planning Board could ask the City Manager for permission to further consider the benefits of Mr. Boyle's proposal.

Ms. Whipple-Boyce assented to that idea.

Motion by Mr. Williams
Seconded by Ms. Whipple-Boyce to move to approve the design plan for 1986 Northlawn.

Motion carried, 7-0.

VOICE VOTE
Yeas: Williams, Whipple-Boyce, Boyle, Koseck, Share, Jeffares, Clein
Nays: None

05-078-19

G. Miscellaneous Business and Communications:
a. Communications

Planning Director Ecker stated that the City Commission stated a public hearing date in June 2019 for Rojo/Sidecar, trash enclosures, screening, and railings.

The Bates Street development is on the meeting agenda for the second meeting in June 2019. City Manager Valentine will provide the Board with more specific direction on its obligations.

Mr. Williams reiterated his request for an opinion from City Attorney Currier on the Board's obligations vis-a-vis the Bates Street development as well.

Pernoi will be back to the PB on June 12, 2019 for bistro consideration. Brooklyn Pizza has not yet submitted.

The Board decided to continue discussion of aging in place, with staff providing information on what other urban communities have done in order to inform the conversation.

b. Administrative Approval Correspondence

City Planner Dupuis explained that the Old Woodward reconstruction removed the outdoor dining space for Mad Hatter Bistro, which is required by ordinance to retain its bistro license. Randy Dickow of Mad Hatter Bistro has negotiated with the next door property owner to use 50% of his frontage, which is permitted by ordinance as long as the next door property is vacant. The remaining issue is that the proposed location of the outdoor dining would cause it to abut a City-

APPROVED

installed stone bench. For this reason, the Planning Department sought the Planning Board's advice as to whether an administrative approval should be granted.

Mr. Dickow suggested that the bench could look like it was enclosing the proposed outdoor dining space. He explained that the Old Woodward reconstruction had detrimental financial effects on the business, and that outdoor dining is a large source of the establishment's revenue for the year.

Board consensus was to allow the proposed outdoor dining plans even though they would abut the bench, because they would rather be supportive of the business and keep the street activated.

Ms. Whipple-Boyce said she thought the Board should revisit the topic of vinyl windows and other enclosures on balconies, decks, etc. similar to what has been done at Crosswinds.

Mr. Koseck and Mr. Williams agreed. The Board asked that it be added to their request list to City Manager Valentine, in addition to waiving the charge for installation of solar panels.

c. Draft Agenda for the next Regular Planning Board Meeting (June 12, 2019)

- Per Noi Bistro
- Public hearing for rooftop uses
- Update of Master Plan
- Aging in place

d. Other Business

Motion by Mr. Williams
Seconded by Mr. Koseck to suspend the Rules of Procedure to allow the Site Plan Review for Pernoi at the Planning Board's June 12, 2019 study session.

Motion carried, 7-0.

VOICE VOTE
Yeas: Williams, Koseck, Boyle, Share, Jeffares, Whipple-Boyce, Clein
Nays: None

05-079-19

H. Adjournment

No further business being evident, the Vice-Chairman adjourned the meeting at 9:08 p.m.

Jana L. Ecker

Planning Director

APPROVED

NEW PV SYSTEM: 6.500 kWp

WEISBERG RESIDENCE

651 W FRANK ST
BIRMINGHAM, MI 48009
ASSESSOR'S #: 081936153006

GENERAL NOTES

1.1.1 **PROJECT NOTES:**
1.1.2 THIS PHOTOVOLTAIC (PV) SYSTEM SHALL COMPLY WITH THE NATIONAL ELECTRIC CODE (NEC) ARTICLE 690, ALL MANUFACTURERS'S LISTING AND INSTALLATION INSTRUCTIONS, AND THE RELEVANT CODES AS SPECIFIED BY THE AUTHORITY HAVING JURISDICTION'S (AHJ) APPLICABLE CODES.
1.1.3 THE UTILITY INTERCONNECTION APPLICATION MUST BE APPROVED AND PV SYSTEM INSPECTED PRIOR TO PARALLEL OPERATION
1.1.4 ALL PV SYSTEM COMPONENTS; MODULES, UTILITY-INTERACTIVE INVERTERS, AND SOURCE CIRCUIT COMBINER BOXES ARE IDENTIFIED AND LISTED FOR USE IN PHOTOVOLTAIC SYSTEMS AS REQUIRED BY NEC 690.4: **PV MODULES:** UL1703, IEC61730, AND IEC61215, AND NFPA 70 CLASS C FIRE **INVERTERS:** UL 1741 CERTIFIED, IEEE 1547, 929, 519 **COMBINER BOX(ES):** UL 1703 OR UL 1741 ACCESSORY
1.1.5 MAX DC VOLTAGE CALCULATED USING MANUFACTURER PROVIDED TEMP COEFFICIENT FOR VOC. IF UNAVAILABLE, MAX DC VOLTAGE CALCULATED ACCORDING TO NEC 690.7.
1.1.6 ALL INVERTERS, PHOTOVOLTAIC MODULES, PHOTOVOLTAIC PANELS, AND SOURCE CIRCUIT COMBINERS INTENDED FOR USE IN A PHOTOVOLTAIC POWER SYSTEM WILL BE IDENTIFIED AND LISTED FOR THE APPLICATION PER 690.4 (D). SHALL BE INSTALLED ACCORDING TO ANY INSTRUCTIONS FROM LISTING OR LABELING [NEC 110.3]
1.1.7 ALL SIGNAGE TO BE PLACED IN ACCORDANCE WITH LOCAL BUILDING CODE. IF EXPOSED TO SUNLIGHT, IT SHALL BE UV RESISTANT. ALL PLAQUES AND SIGNAGE WILL BE INSTALLED AS REQUIRED BY THE NEC AND AHJ.

1.2.1 **SCOPE OF WORK:**
1.2.2 PRIME CONTRACTOR IS RESPONSIBLE FOR THE DESIGN AND SPECIFICATIONS OF THE GRID-TIED PHOTOVOLTAIC SYSTEM RETROFIT. PRIME CONTRACTOR WILL BE RESPONSIBLE FOR COLLECTING EXISTING ONSITE REQUIREMENTS TO DESIGN, SPECIFY, AND INSTALL THE EXTERIOR ROOF-MOUNTED PORTION OF THE PHOTOVOLTAIC SYSTEMS DETAILED IN THIS DOCUMENT.

1.3.1 **WORK INCLUDES:**
1.3.2 PV ROOF ATTACHMENTS - IRONRIDGE FLASHFOOT2
1.3.3 PV RACKING SYSTEM INSTALLATION - IRONRIDGE XR100
1.3.4 PV MODULE AND INVERTER INSTALLATION - PANASONIC VBHN325SA16 / SOLAR EDGE - SE7600A-US
1.3.5 PV EQUIPMENT GROUNDING
1.3.6 PV SYSTEM WIRING TO A ROOF-MOUNTED JUNCTION BOX
1.3.7 PV LOAD CENTERS (IF INCLUDED)
1.3.8 PV METERING/MONITORING (IF INCLUDED)
1.3.9 PV DISCONNECTS
1.3.10 PV FINAL COMMISSIONING
1.3.11 (E) ELECTRICAL EQUIPMENT RETROFIT FOR PV
1.3.12 SIGNAGE PLACED IN ACCORDANCE WITH LOCAL BUILDING CODE

SCOPE OF WORK:

SYSTEM SIZE:	STC: 20 x 325W = 6.500kW PTC: 20 x 306.5W= 6.130kW DC (20) PANASONIC VBHN325SA16 (1) SOLAR EDGE SE7600A-US (240V)
ATTACHMENT TYPE:	IRONRIDGE FLASHFOOT2
MSP UPGRADE:	NO

RECEIVED
MAY 0 7 2019
CITY OF BIRMINGHAM
COMMUNITY DEVELOPMENT DEPARTMENT

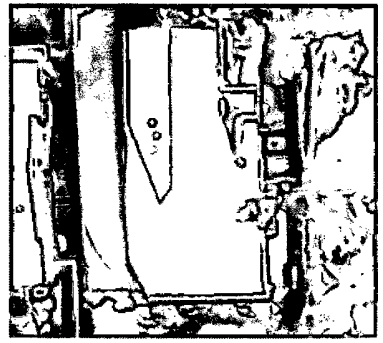

01 AERIAL PHOTO
NOT TO SCALE

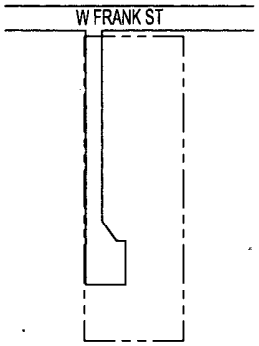

02 PLAT MAP
NOT TO SCALE

N
W E
S

SHEET LIST

SHEET NUMBER	SHEET TITLE
T-001	COVER PAGE
G-001	NOTES
A-101	SITE PLAN
A-102	ELECTRICAL PLAN
A-103	SOLAR ATTACHMENT PLAN
E-601	LINE DIAGRAM
E-602	DESIGN TABLES
E-603	PLACARDS
S-501	ASSEMBLY DETAILS
R-001	RESOURCE DOCUMENT
R-002	RESOURCE DOCUMENT
R-003	RESOURCE DOCUMENT
R-004	RESOURCE DOCUMENT
R-005	RESOURCE DOCUMENT

PROJECT INFORMATION

OWNER
NAME: MICHAEL WEISBERG

PROJECT MANAGER
NAME: DREW BARTOSIK
PHONE: (248) 760-3184

CONTRACTOR
NAME: STRAWBERRY SOLAR
PHONE: (248) 760-3184

AUTHORITIES HAVING JURISDICTION
BUILDING: BIRMINGHAM BUILDING & PLANNING
ZONING: BIRMINGHAM BUILDING & PLANNING
UTILITY: DTE ENERGY

DESIGN SPECIFICATIONS
OCCUPANCY: II
CONSTRUCTION: SINGLE-FAMILY
ZONING: RESIDENTIAL GRID-TIED
GROUND SNOW LOAD: 25 PSF
WIND EXPOSURE: B
WIND SPEED: 115 MPH

APPLICABLE CODES & STANDARDS
BUILDING: MICHIGAN BUILDING CODE 2015, MICHIGAN RESIDENTIAL CODE 2015
ELECTRICAL: NEC 2017
FIRE: IFC 2015

STRAWBERRY SOLAR

CONTRACTOR

STRAWBERRY SOLAR

PHONE: (248) 760-3184
ADDRESS: 4444 2ND AVE
DETROIT, MI 48201

LIC. NO.: 6113290
HIC. NO.:
ELE. NO.:

UNAUTHORIZED USE OF THIS DRAWING SET WITHOUT WRITTEN PERMISSION FROM CONTRACTOR IS IN VIOLATION OF U.S. COPYRIGHT LAWS AND WILL BE SUBJECT TO CIVIL DAMAGES AND PROSECUTIONS

NEW PV SYSTEM: 6.500 kW

WEISBERG RESIDENCE
651 W FRANK ST
BIRMINGHAM, MI 48009
APN: 081936153006

ENGINEER OF RECORD

PAPER SIZE: 11" x 17" (ANSI B)

COVER PAGE

DATE: 05.05.2019
DESIGN BY: A.T.
CHECKED BY:

REVISIONS

T-001.00
(SHEET 1)

2.1.1 **SITE NOTES:**

2.1.2 A LADDER WILL BE IN PLACE FOR INSPECTION IN COMPLIANCE WITH OSHA REGULATIONS.

2.1.3 THE PV MODULES ARE CONSIDERED NON-COMBUSTIBLE AND THIS SYSTEM IS A UTILITY INTERACTIVE SYSTEM WITH NO STORAGE BATTERIES.

2.1.4 THE SOLAR PV INSTALLATION WILL NOT OBSTRUCT ANY PLUMBING, MECHANICAL, OR BUILDING ROOF VENTS.

2.1.5 PROPER ACCESS AND WORKING CLEARANCE AROUND EXISTING AND PROPOSED ELECTRICAL EQUIPMENT WILL BE PROVIDED AS PER SECTION NEC 110.26.

2.1.6 ROOF COVERINGS SHALL BE DESIGNED, INSTALLED, AND MAINTAINED IN ACCORDANCE WITH THIS CODE AND THE APPROVED MANUFACTURER'S INSTRUCTIONS SUCH THAT THE ROOF COVERING SERVES TO PROTECT THE BUILDING OR STRUCTURE.

2.2.1 **EQUIPMENT LOCATIONS**

2.2.2 ALL EQUIPMENT SHALL MEET MINIMUM SETBACKS AS REQUIRED BY NEC 110.26.

2.2.3 WIRING SYSTEMS INSTALLED IN DIRECT SUNLIGHT MUST BE RATED FOR EXPECTED OPERATING TEMPERATURE AS SPECIFIED BY NEC 690.31 (A),(C) AND NEC TABLES 310.15 (B)(2)(A) AND 310.15 (B)(3)(C).

2.2.3 JUNCTION AND PULL BOXES PERMITTED INSTALLED UNDER PV MODULES ACCORDING TO NEC 690.34.

2.2.4 ADDITIONAL AC DISCONNECT(S) SHALL BE PROVIDED WHERE THE INVERTER IS NOT WITHIN SIGHT OF THE AC SERVICING DISCONNECT.

2.2.5 ALL EQUIPMENT SHALL BE INSTALLED ACCESSIBLE TO QUALIFIED PERSONNEL ACCORDING TO NEC APPLICABLE CODES.

2.2.6 ALL COMPONENTS ARE LISTED FOR THEIR PURPOSE AND RATED FOR OUTDOOR USAGE WHEN APPROPRIATE.

2.3.1 **STRUCTURAL NOTES:**

2.3.2 RACKING SYSTEM & PV ARRAY WILL BE INSTALLED ACCORDING TO CODE-COMPLIANT INSTALLATION MANUAL. TOP CLAMPS REQUIRE A DESIGNATED SPACE BETWEEN MODULES, AND RAILS MUST ALSO EXTEND A MINIMUM DISTANCE BEYOND EITHER EDGE OF THE ARRAY/SUBARRAY, ACCORDING TO RAIL MANUFACTURER'S INSTRUCTIONS.

2.3.3 JUNCTION BOX WILL BE INSTALLED PER MANUFACTURERS' SPECIFICATIONS. IF ROOF-PENETRATING TYPE, IT SHALL BE FLASHED & SEALED PER LOCAL REQUIREMENTS.

2.3.4 ROOFTOP PENETRATIONS FOR PV RACEWAY WILL BE COMPLETED AND SEALED W/ APPROVED CHEMICAL SEALANT PER CODE BY A LICENSED CONTRACTOR.

2.3.5 ALL PV RELATED ROOF ATTACHMENTS TO BE SPACED NO GREATER THAN THE SPAN DISTANCE SPECIFIED BY THE RACKING MANUFACTURER.

2.3.6 WHEN POSSIBLE, ALL PV RELATED RACKING ATTACHMENTS WILL BE STAGGERED AMONGST THE ROOF FRAMING MEMBERS.

2.4.1 **GROUNDING NOTES:**

2.4.2 GROUNDING SYSTEM COMPONENTS SHALL BE LISTED FOR THEIR PURPOSE, AND GROUNDING DEVISES EXPOSED TO THE ELEMENTS SHALL BE RATED FOR SUCH USE.

2.4.3 PV SYSTEMS REQUIRE AN EQUIPMENT GROUNDING CONDUCTOR. ALL METAL ELECTRICAL EQUIPMENT AND STRUCTURAL COMPONENTS BONDED TO GROUND, IN ACCORDANCE WITH 250.134 OR 250.136(A). ONLY THE DC CONDUCTORS ARE UNGROUNDED.

2.4.4 PV EQUIPMENT SHALL BE GROUNDED ACCORDING TO NEC 690.43 AND MINIMUM NEC TABLE 250.122.

2.4.5 METAL PARTS OF MODULE FRAMES, MODULE RACKING, AND ENCLOSURE CONSIDERED GROUNDED IN ACCORD WITH 250.134 AND 250.136(A).

2.4.6 EACH MODULE WILL BE GROUNDED USING WEEB GROUNDING CLIPS AS SHOWN IN MANUFACTURER DOCUMENTATION AND APPROVED BY THE AHJ. IF WEEBS ARE NOT USED, MODULE GROUNDING LUGS MUST BE INSTALLED AT THE SPECIFIED GROUNDING LUG HOLES PER THE MANUFACTURERS' INSTALLATION REQUIREMENTS.

2.4.7 THE GROUNDING CONNECTION TO A MODULE SHALL BE ARRANGED SUCH THAT THE REMOVAL OF A MODULE DOES NOT INTERRUPT A GROUNDING CONDUCTOR TO ANOTHER MODULE.

2.4.8 GROUNDING AND BONDING CONDUCTORS, IF INSULATED, SHALL BE COLORED GREEN OR MARKED GREEN IF #4 AWG OR LARGER [NEC 250.119]

2.4.9 THE GROUNDING ELECTRODE SYSTEM COMPLIES WITH NEC 690.47 AND NEC 250.50 THROUGH 250.106. IF EXISTING SYSTEM IS INACCESSIBLE, OR INADEQUATE, A GROUNDING ELECTRODE SYSTEM PROVIDED ACCORDING TO NEC 250, NEC 690.47 AND AHJ.

2.4.10 DC PV ARRAYS SHALL BE PROVIDED WITH DC GROUND-FAULT PROTECTION MEETING THE REQUIREMENTS OF 690.41(B)(1) AND (2) TO REDUCE FIRE HAZARDS

2.5.1 **INTERCONNECTION NOTES:**

2.5.2 LOAD-SIDE INTERCONNECTION SHALL BE IN ACCORDANCE WITH [NEC 705.12 (B)]

2.5.3 THE SUM OF THE UTILITY OCPD AND INVERTER CONTINUOUS OUTPUT MAY NOT EXCEED 120% OF BUSBAR RATING [NEC 705.12(B)(2)(3)].

2.5.4 THE SUM OF 125 PERCENT OF THE POWER SOURCE(S) OUTPUT CIRCUIT CURRENT AND THE RATING OF THE OVERCURRENT DEVICE PROTECTING THE BUSBAR SHALL NOT EXCEED 120 PERCENT OF THE AMPACITY OF THE BUSBAR, PV DEDICATED BACKFEED BREAKERS MUST BE LOCATED OPPOSITE END OF THE BUS FROM THE UTILITY SOURCE OCPD [NEC 705.12(B)(2)(3)].

2.5.5 AT MULTIPLE ELECTRIC POWER SOURCES OUTPUT COMBINER PANEL, TOTAL RATING OF ALL OVERCURRENT DEVICES SHALL NOT EXCEED AMPACITY OF BUSBAR. HOWEVER, THE COMBINED OVERCURRENT DEVICE MAY BE EXCLUDED ACCORDING TO NEC 705.12 (B)(2)(3)(C).

2.5.6 FEEDER TAP INTERCONECTION (LOAD SIDE) ACCORDING TO NEC 705.12 (B)(2)(1)

2.5.7 SUPPLY SIDE TAP INTERCONNECTION ACCORDING TO NEC 705.12 (A) WITH SERVICE ENTRANCE CONDUCTORS IN ACCORDANCE WITH NEC 230.42

2.5.8 BACKFEEDING BREAKER FOR ELECTRIC POWER SOURCES OUTPUT IS EXEMPT FROM ADDITIONAL FASTENING [NEC 705.12 (B)(5)].

2.6.1 **DISCONNECTION AND OVER-CURRENT PROTECTION NOTES:**

2.6.2 DISCONNECTING SWITCHES SHALL BE WIRED SUCH THAT WHEN THE SWITCH IS OPENED THE CONDUCTORS REMAINING ENERGIZED ARE CONNECTED TO THE TERMINALS MARKED "LINE SIDE" (TYPICALLY THE UPPER TERMINALS).

2.6.3 DISCONNECTS TO BE ACCESSIBLE TO QUALIFIED UTILITY PERSONNEL, BE LOCKABLE, AND BE A VISIBLE-BREAK SWITCH.

2.6.4 BOTH POSITIVE AND NEGATIVE PV CONDUCTORS ARE UNGROUNDED. THEREFORE BOTH MUST OPEN WHERE A DISCONNECT IS REQUIRED, ACCORDING TO NEC 690.13.

2.6.5 ISOLATING DEVICES OR EQUIPMENT DISCONNECTING MEANS SHALL BE INSTALLED IN CIRCUITS CONNECTED TO EQUIPMENT AT A LOCATION WITHIN THE EQUIPMENT, OR WITHIN SIGHT AND WITHIN 10 FT OF THE EQUIPMENT. AN EQUIPMENT DISCONNECTING MEANS SHALL BE PERMITTED TO BE REMOTE FROM THE EQUIPMENT WHERE THE EQUIPMENT DISCONNECTING MEANS CAN BE REMOTELY OPERATED FROM WITHIN 10 FT OF THE EQUIPMENT, ACCORDING TO NEC 690.15 (A).

2.6.6 PV SYSTEM CIRCUITS INSTALLED ON OR IN BUILDINGS SHALL INCLUDE A RAPID SHUTDOWN FUNCTION TO REDUCE SHOCK HAZARD FOR EMERGENCY RESPONDERS IN ACCORDANCE WITH 690.12(A) THROUGH (D)

2.6.7 ALL OCPD RATINGS AND TYPES SPECIFIED ACCORDING TO NEC 690.8, 690.9, AND 240.

2.6.8 BOTH POSITIVE AND NEGATIVE PV CONDUCTORS ARE UNGROUNDED, THEREFORE BOTH REQUIRE OVER-CURRENT PROTECTION, ACCORDING TO NEC 240.21. (SEE EXCEPTION IN NEC 690.9)

2.6.9 IF REQUIRED BY AHJ, SYSTEM WILL INCLUDE ARC-FAULT CIRCUIT PROTECTION ACCORDING TO NEC 690.11 AND UL1699B.

2.7.1 **WIRING & CONDUIT NOTES:**

2.7.2 ALL CONDUIT AND WIRE WILL BE LISTED AND APPROVED FOR THEIR PURPOSE. CONDUIT AND WIRE SPECIFICATIONS ARE BASED ON MINIMUM CODE REQUIREMENTS AND ARE NOT MEANT TO LIMIT UP-SIZING.

2.7.3 ALL CONDUCTORS SIZED ACCORDING TO NEC 690.8, NEC 690.7.

2.7.4 EXPOSED PV SOURCE CIRCUITS AND OUTPUT CIRCUITS SHALL USE WIRE LISTED AND IDENTIFIED AS PHOTOVOLTAIC (PV) WIRE [690.31 (C)]. PV MODULES WIRE LEADS SHALL BE LISTED FOR USE ON PV ARRAYS, ACCORDING TO NEC 690.31 (A).

2.7.5 PV WIRE BLACK WIRE MAY BE FIELD-MARKED WHITE [NEC 200.6 (A)(6)].

2.7.6 MODULE WIRING SHALL BE LOCATED AND SECURED UNDER THE ARRAY.

2.7.7 ACCORDING TO NEC 200.7, UNGROUNDED SYSTEMS DC CONDUCTORS COLORED OR MARKED AS FOLLOWS:

DC POSITIVE- RED, OR OTHER COLOR EXCLUDING WHITE, GREY AND GREEN

DC NEGATIVE- BLACK, OR OTHER COLOR EXCLUDING WHITE, GREY AND GREEN

2.7.8 AC CONDUCTORS COLORED OR MARKED AS FOLLOWS:

PHASE A OR L1- BLACK

PHASE B OR L2- RED, OR OTHER CONVENTION IF THREE PHASE

PHASE C OR L3- BLUE, YELLOW, ORANGE*, OR OTHER CONVENTION

NEUTRAL- WHITE OR GREY

* IN 4-WIRE DELTA CONNECTED SYSTEMS THE PHASE WITH HIGHER VOLTAGE TO BE MARKED ORANGE [NEC 110.15].

STRAWBERRY SOLAR

CONTRACTOR

STRAWBERRY SOLAR

PHONE: (248) 760-3184

ADDRESS: 4444 2ND AVE
DETROIT, MI 48201

LIC. NO.: 6113290
HIC. NO.:
ELE. NO.:

UNAUTHORIZED USE OF THIS DRAWING SET WITHOUT WRITTEN PERMISSION FROM CONTRACTOR IS IN VIOLATION OF U.S. COPYRIGHT LAWS AND WILL BE SUBJECT TO CIVIL DAMAGES AND PROSECUTIONS

NEW PV SYSTEM: 6.500 kW

WEISBERG RESIDENCE

651 W FRANK ST
BIRMINGHAM, MI 48009
APN: 081936153006

ENGINEER OF RECORD

PAPER SIZE: 11" x 17" (ANSI B)

NOTES

DATE: 05.05.2019

DESIGN BY: A.T.

CHECKED BY:

REVISIONS

G-001.00

(SHEET 2)

NOTE:
THE VISIBLE LOCKABLE LABELED AC DISCONNECT IS LOCATED WITHIN 5 FT. OF METER

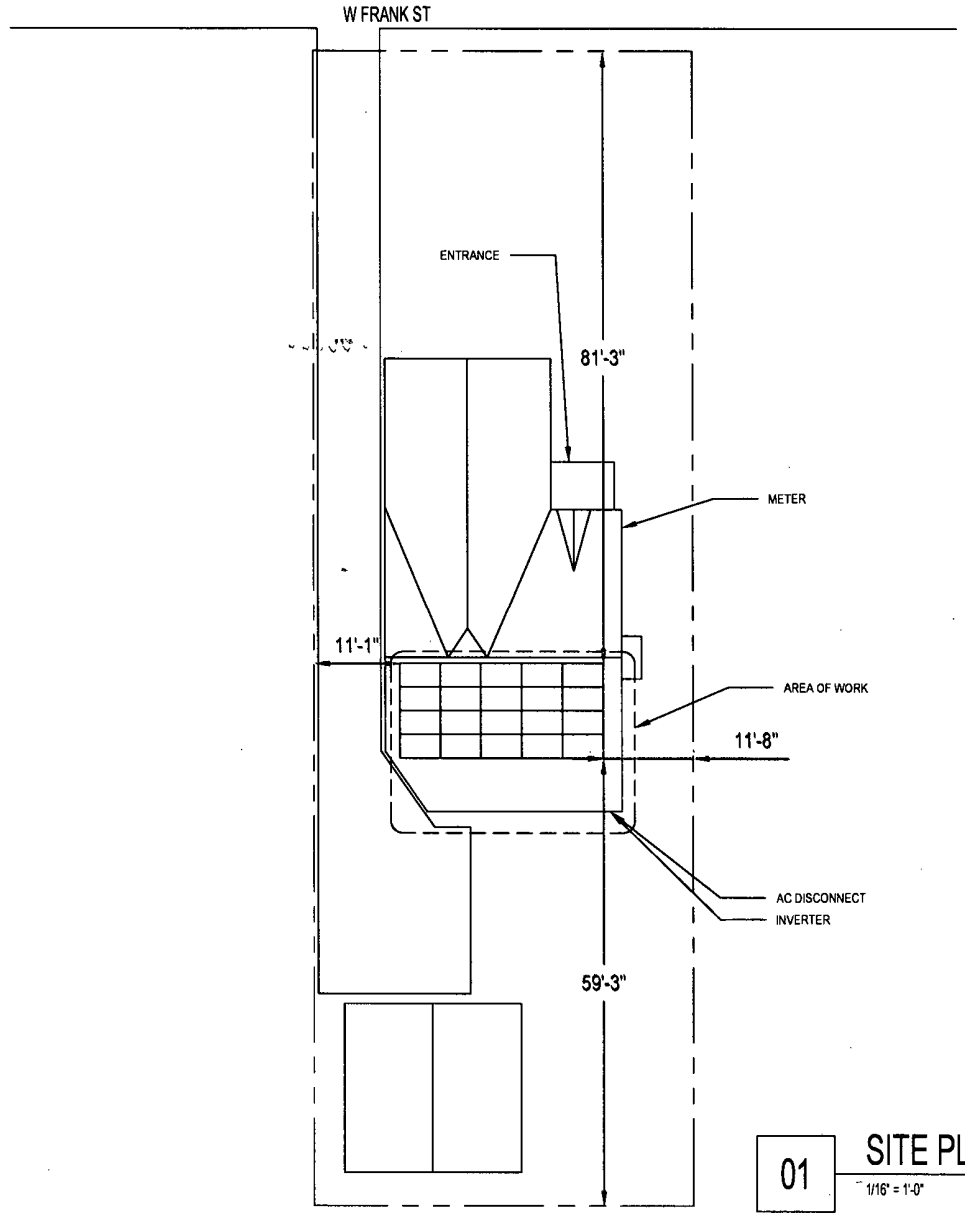

GENERAL NOTES

1. FIELD VERIFY ALL MEASUREMENTS
2. ITEMS BELOW MAY NOT BE ON THIS PAGE

---------- PROPERTY LINE

01 SITE PLAN

1/16" = 1'-0"

0 8' 16'

N W E S

STRAWBERRY SOLAR

CONTRACTOR

STRAWBERRY SOLAR

PHONE: (248) 760-3184
ADDRESS: 4444 2ND AVE
DETROIT, MI 48201

LIC. NO.: 6113290
HIC. NO.:
ELE. NO.:

UNAUTHORIZED USE OF THIS DRAWING SET WITHOUT WRITTEN PERMISSION FROM CONTRACTOR IS IN VIOLATION OF U.S. COPYRIGHT LAWS AND WILL BE SUBJECT TO CIVIL DAMAGES AND PROSECUTIONS.

NEW PV SYSTEM: 6.500 kW

WEISBERG RESIDENCE

651 W FRANK ST
BIRMINGHAM, MI 48009
APN: 081936153006

ENGINEER OF RECORD

PAPER SIZE: 11" x 17" (ANSI B)

SITE PLAN

DATE: 05.05.2019
DESIGN BY: A.T.
CHECKED BY:

REVISIONS

A-101.00
(SHEET 3)

GENERAL NOTES

1. FIELD VERIFY ALL MEASUREMENTS
2. ITEMS BELOW MAY NOT BE ON THIS PAGE

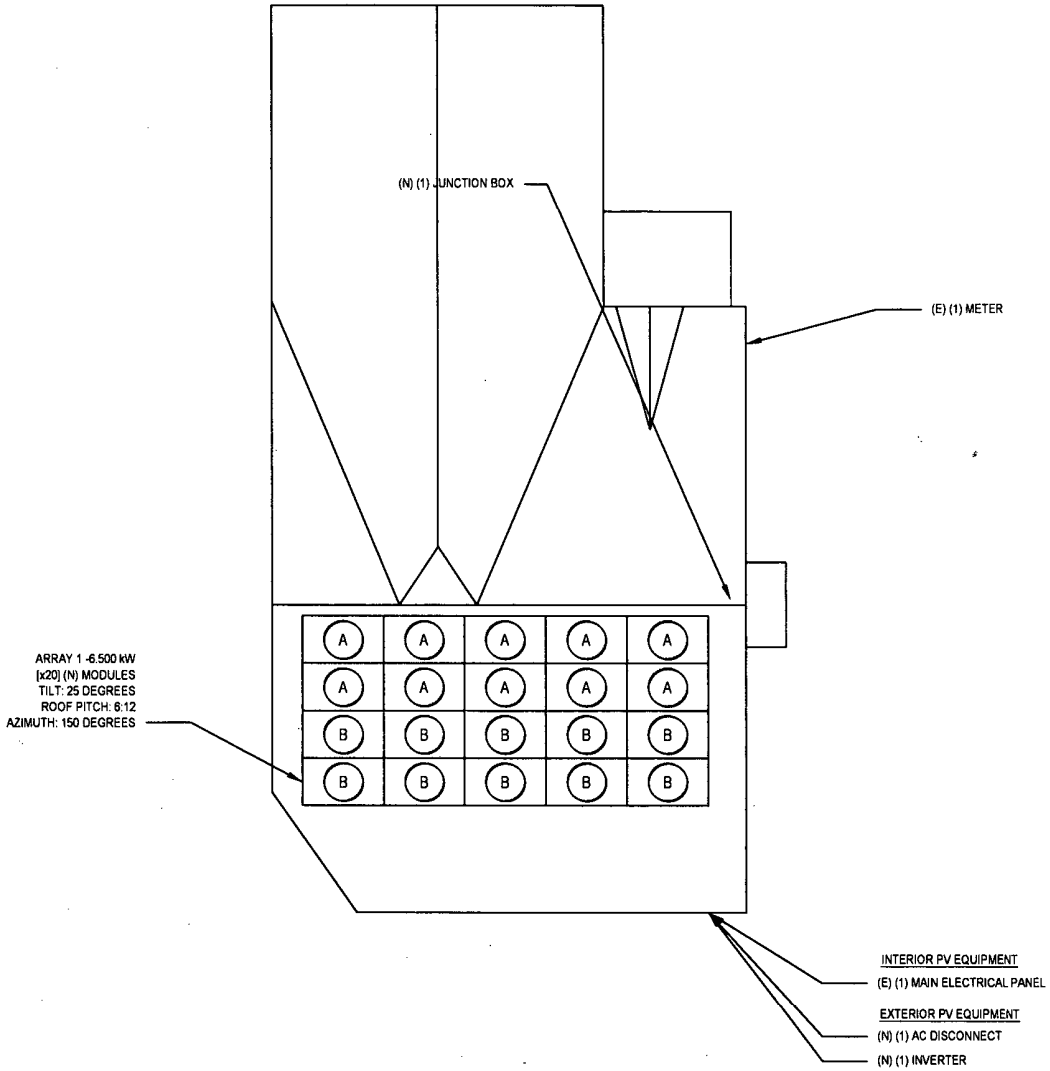

A MODULE STRINGING

B MODULE STRINGING

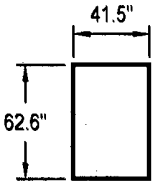

MODULE:
PANASONIC
VBHN325SA16
325 WATTS

01 ELECTRICAL PLAN

1/8" = 1'

0 4' 8'

N W E S

STRAWBERRY SOLAR

CONTRACTOR

STRAWBERRY SOLAR

PHONE: (248) 760-3184
ADDRESS: 4444 2ND AVE
DETROIT, MI 48201

LIC. NO.: 6113290
HIC. NO.:
ELE. NO.:

UNAUTHORIZED USE OF THIS DRAWING SET WITHOUT WRITTEN PERMISSION FROM CONTRACTOR IS IN VIOLATION OF U.S. COPYRIGHT LAWS AND WILL BE SUBJECT TO CIVIL DAMAGES AND PROSECUTIONS.

NEW PV SYSTEM: 6.500 kW

WEISBERG RESIDENCE

651 W FRANK ST
BIRMINGHAM, MI 48009
APN: 081936153006

ENGINEER OF RECORD

PAPER SIZE: 11" x 17" (ANSI B)

ELECTRICAL PLAN

DATE: 05.05.2019
DESIGN BY: A.T.
CHECKED BY:

REVISIONS

A-102.00
(SHEET 4)

GENERAL NOTES

1. FIELD VERIFY ALL MEASUREMENTS
2. ITEMS BELOW MAY NOT BE ON THIS PAGE

— — — — ROOF TRUSSES

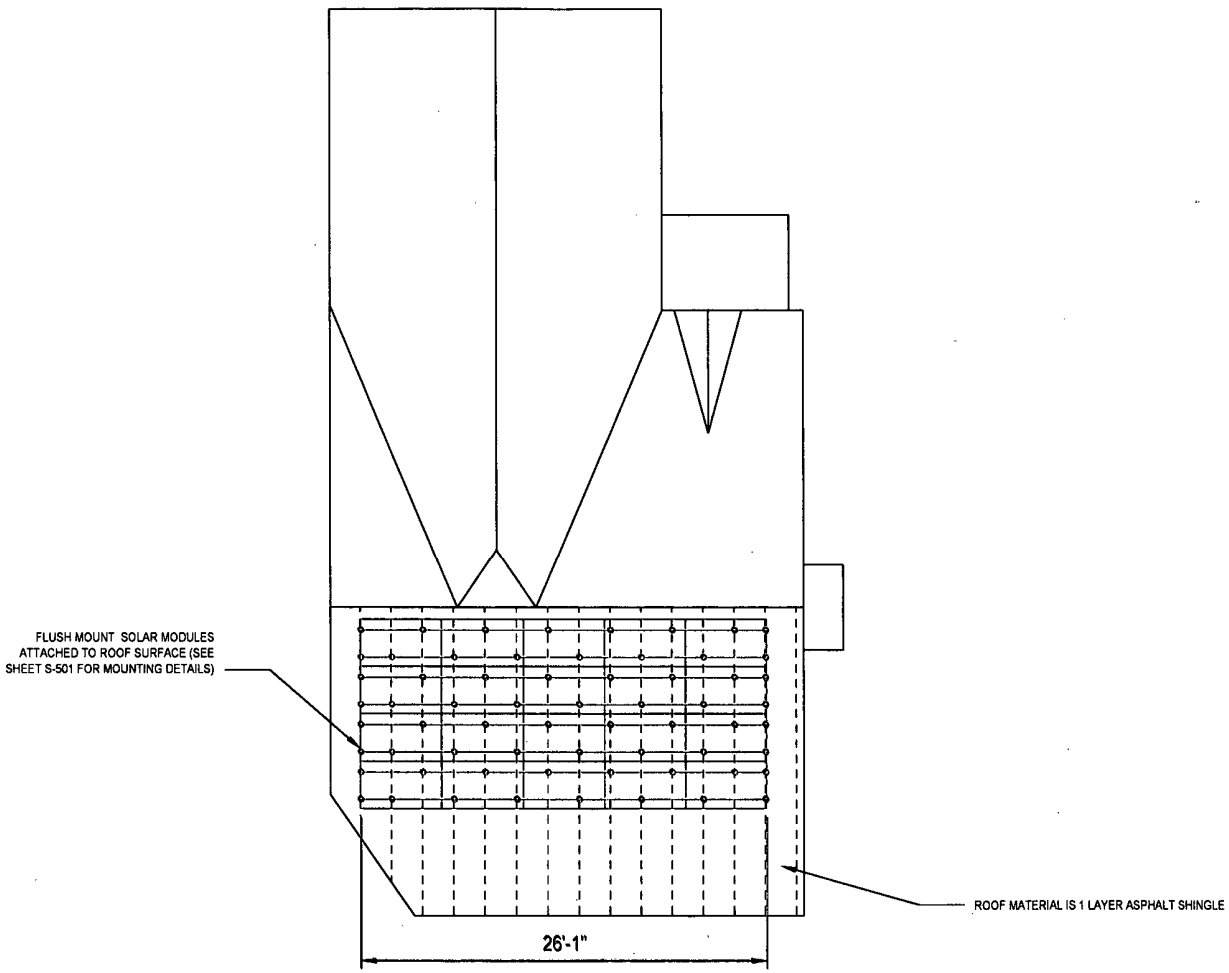

01 SOLAR ATTACHMENT PLAN

1/8" = 1' 0 4' 8'

N W E S

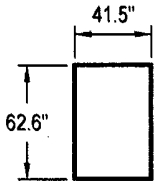

MODULE:
PANASONIC
VBHN325SA16
325 WATTS

STRAWBERRY SOLAR

CONTRACTOR

STRAWBERRY SOLAR

PHONE: (248) 760-3184
ADDRESS: 4444 2ND AVE
DETROIT, MI 48201

LIC. NO.: 6113290
HIC. NO.:
ELE. NO.:

UNAUTHORIZED USE OF THIS DRAWING SET WITHOUT WRITTEN PERMISSION FROM CONTRACTOR IS IN VIOLATION OF U.S. COPYRIGHT LAWS AND WILL BE SUBJECT TO CIVIL DAMAGES AND PROSECUTIONS.

NEW PV SYSTEM: 6.500 kW

WEISBERG RESIDENCE

651 W FRANK ST
BIRMINGHAM, MI 48009
APN: 081936153006

ENGINEER OF RECORD

PAPER SIZE: 11" x 17" (ANSI B)

SOLAR ATTACHMENT PLAN

DATE: 05.05.2019
DESIGN BY: A.T.
CHECKED BY:

REVISIONS

A-103.00
(SHEET 5)

CONDUCTOR AND CONDUIT SCHEDULE W/ELECTRICAL CALCULATIONS														
ID	TYPICAL	CONDUCTOR	CONDUIT	CURRENT-CARRYING CONDUCTORS IN CONDUIT	OCPD	EGC	TEMP. CORR. FACTOR	CONDUIT FILL FACTOR	CONT. CURRENT	MAX. CURRENT (125%)	BASE AMP.	DERATED AMP.	TERM. TEMP. RATING	AMP. @ TERMINAL
01	2	10 AWG PV WIRE, COPPER	FREE AIR	2	N/A	6 AWG BARE, COPPER	0.76 (54.8°C)	1	15A	18.75A	55A	41.8A	75°C	50A
02	1	10 AWG THWN-2, COPPER	0.75" DIA EMT	4	N/A	6 AWG THWN-2, COPPER	0.76 (54.8°C)	0.8	15A	18.75A	40A	24.32A	75°C	35A
03	1	8 AWG THWN-2, COPPER	0.75" DIA EMT	2	N/A	6 AWG THWN-2, COPPER	0.96 (32.8°C)	1	32A	40A	55A	52.8A	75°C	50A
04	1	8 AWG THWN-2, COPPER	0.75" DIA EMT	2	40A	6 AWG THWN-2, COPPER	0.96 (32.8°C)	1	32A	40A	55A	52.8A	75°C	50A

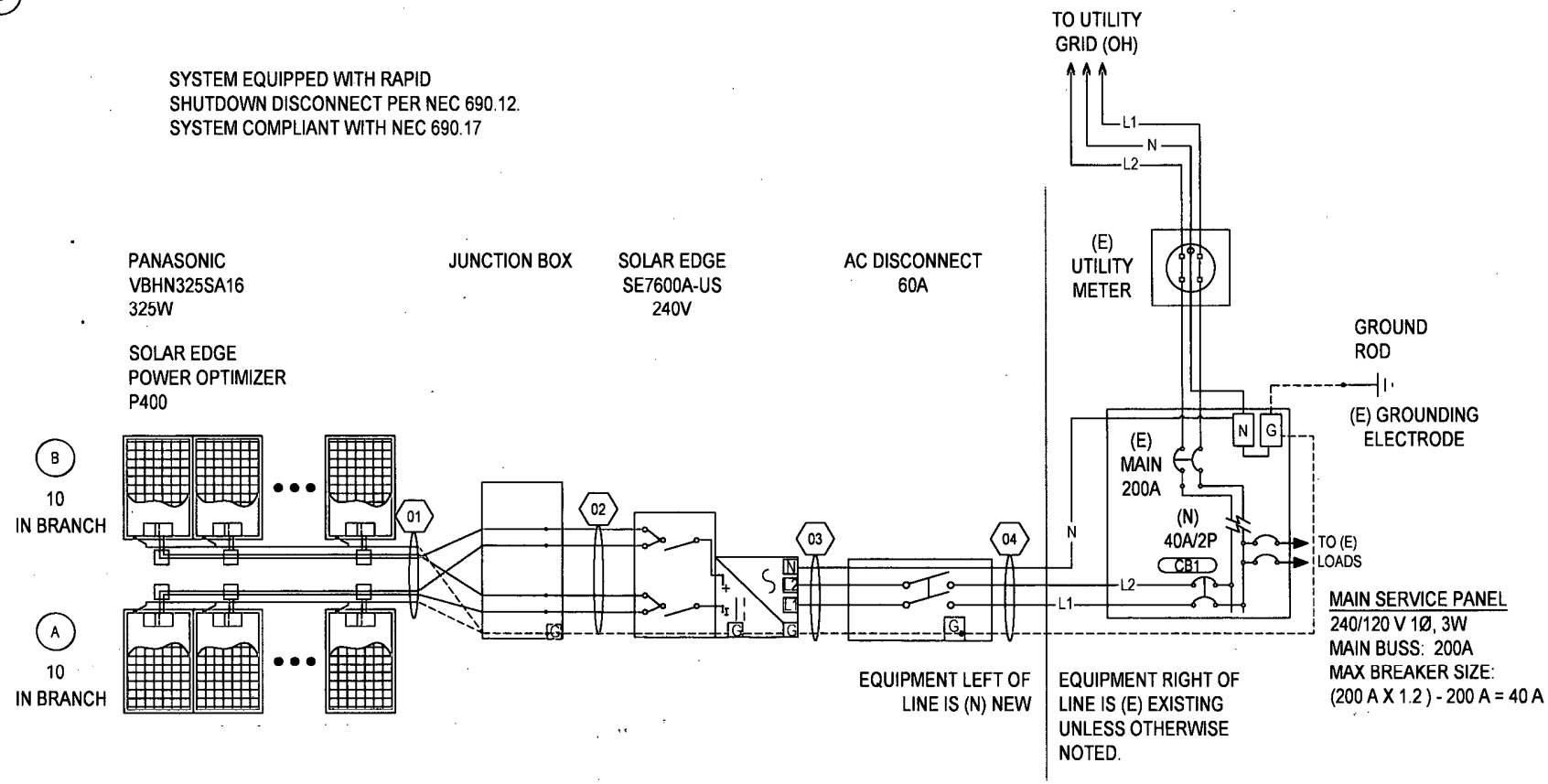

STRAWBERRY SOLAR

CONTRACTOR

STRAWBERRY SOLAR

PHONE: (248) 760-3184
ADDRESS: 4444 2ND AVE
DETROIT, MI 48201

LIC. NO.: 6113290
HIC. NO.:
ELE. NO.:

UNAUTHORIZED USE OF THIS DRAWING SET WITHOUT WRITTEN PERMISSION FROM CONTRACTOR IS IN VIOLATION OF U.S. COPYRIGHT LAWS AND WILL BE SUBJECT TO CIVIL DAMAGES AND PROSECUTIONS.

NEW PV SYSTEM: 6.500 kW

WEISBERG RESIDENCE

651 W FRANK ST
BIRMINGHAM, MI 48009
APN: 081936153006

ENGINEER OF RECORD

PAPER SIZE: 11" x 17" (ANSI B)

LINE DIAGRAM

DATE: 05.05.2019
DESIGN BY: A.T.
CHECKED BY:

REVISIONS

E-601.00
(SHEET 6)

PROJECT DESCRIPTION:

24 X 320 SILFAB SOLAR SIL-320 BL MODULES
ROOF MOUNTED SOLAR PHOTOVOLTAIC MODULES

SYSTEM SIZE:7.68 kW DC STC
ARRAY AREA: ROOF#1 - 219.60 SQ FT
ARRAY AREA: ROOF#2 - 219.60 SQ FT

AUTHORITIES HAVING JURISDICTION
BUILDING : OAKLAND COUNTY
ZONING : OAKLAND COUNTY
UTILITY : DTE ENERGY

EQUIPMENT SUMMARY
24 SILFAB SOLAR SIL-320 BL MODULES
04 GENERAC PV LINK S2502 POWER OPTIMIZERS
01 GENERAC PWRCELL X7602 7600W INVERTER

APPLICABLE CODES & STANDARDS
MICHIGAN RESIDENTIAL CODE 2015
NEC 2017

DESIGN SPECIFICATIONS
OCCUPANCY : II
CONSTRUCTION : SINGLE-FAMILY
ZONING : RESIDENTIAL
GROUND SNOW LOAD : SEE STRUCTURAL LETTER
WIND EXPOSURE : SEE STRUCTURAL LETTER
WIND SPEED : SEE STRUCTURAL LETTER

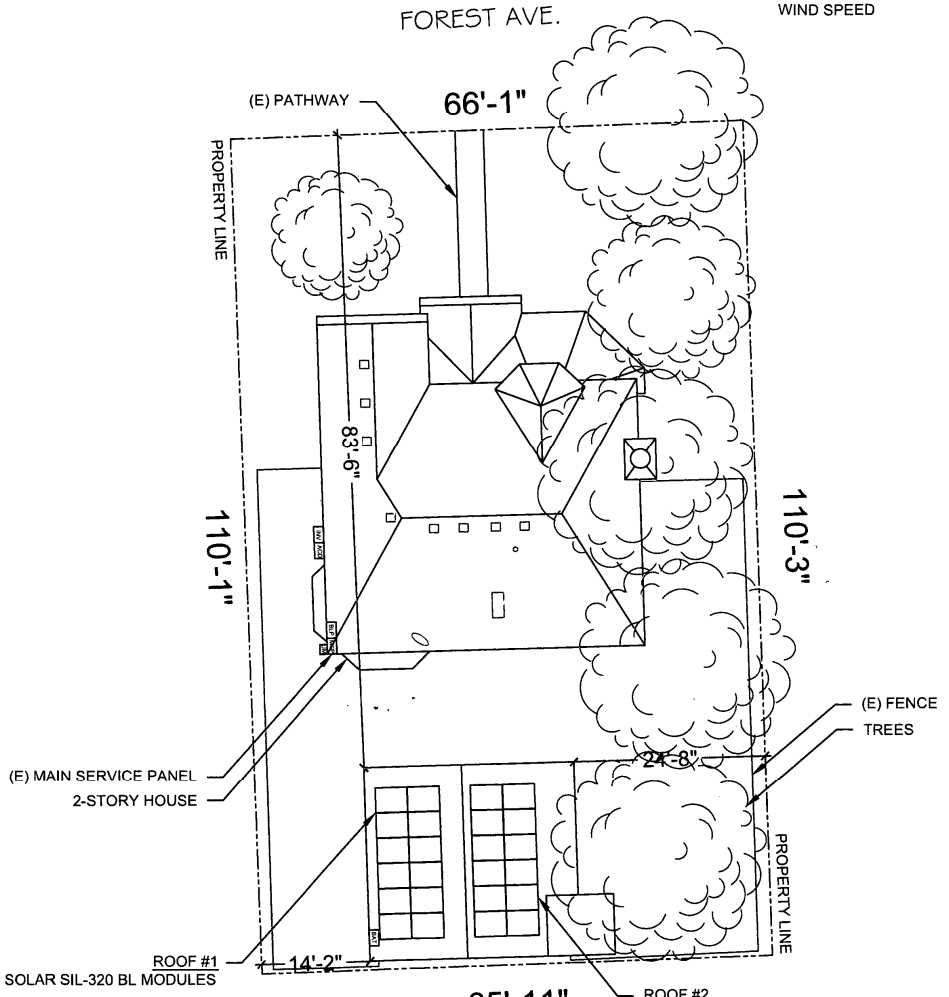

1 PLOT PLAN & VICINITY MAP
PV-1 SCALE: 1/16" = 1'-0"

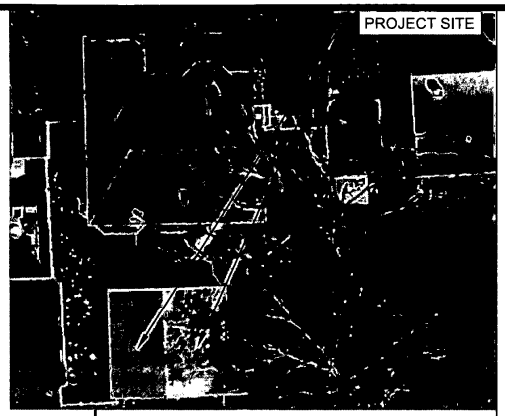

2 HOUSE PHOTO
PV-1 SCALE: NTS

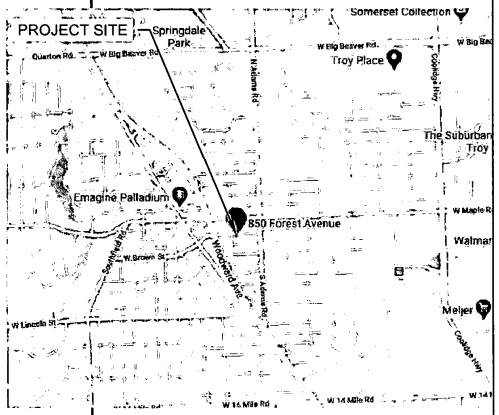

3 VICINITY MAP
PV-1 SCALE: NTS

SHEET INDEX

PV-1	PLOT PLAN & VICINITY MAP
PV-2	ROOF PLAN & MODULES
PV-2A	STRING LAYOUT
PV-3	ATTACHMENT DETAIL
PV-4	ELECTRICAL LINE DIAGRAM
PV-5	WIRING CALCULATIONS
PV-6 to 12	EQUIPMENT SPECIFICATIONS

POWERHOME
POWER HOME SOLAR, LLC
"POWER YOUR FUTURE"
919 N. MAIN ST.
MOORESVILLE, NC 28115
Phone: 704-800-6591 (OFFICE)
Email: info@powerhome.com
Web: www.powerhome.com

REVISIONS

DESCRIPTION	DATE	REV

Signature with Seal

DATE: 6/16/2020

PROJECT NAME & ADDRESS
STEVEN RUZUMNA RESIDENCE
850 FOREST AVE.,
BIRMINGHAM, MI 48009

SHEET NAME
PLOT PLAN & VICINITY MAP

SHEET SIZE
ANSI B
11" X 17"

SHEET NUMBER
PV-1

MODULE TYPE, DIMENSIONS & WEIGHT

NUMBER OF MODULES = 24 MODULES
MODULE TYPE = SILFAB SOLAR SIL-320 BL MODULES
MODULE WEIGHT = 43.00 LBS / 19.5 KG.
MODULE DIMENSIONS = 66.93"x 39.37" = 18.30 SF
UNIT WEIGHT OF ARRAY = 2.35 PSF

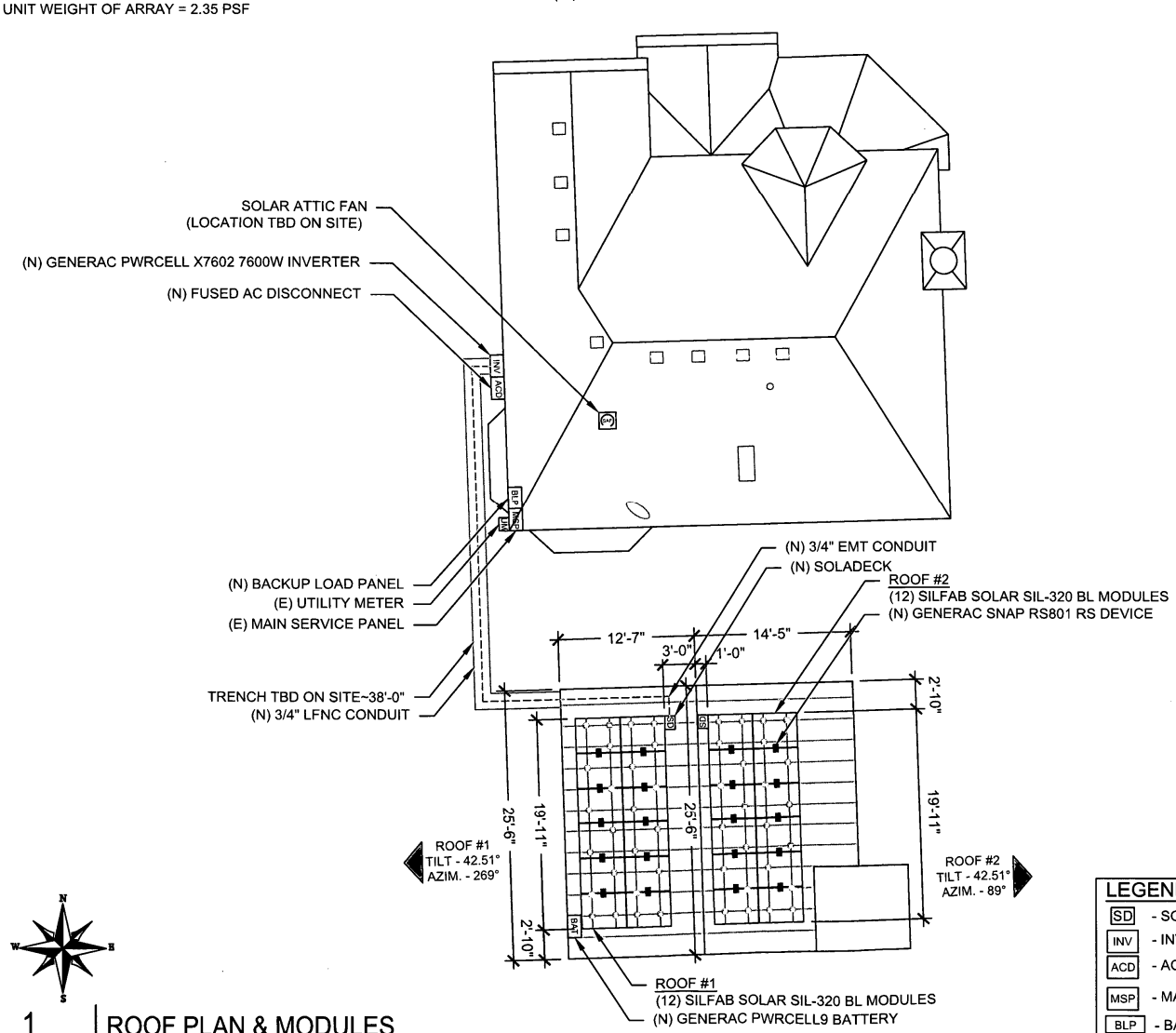

1 ROOF PLAN & MODULES
PV-2
SCALE: 3/32" = 1'-0"

ROOF DESCRIPTION				
ROOF TYPE			COMPOSITION SHINGLE	
ROOF	ROOF TILT	AZIMUTH	FRAMING SIZE	FRAMING SPACING
#1	42.51°	269°	SEE STRUCTURAL LETTER	
#2	42.51°	89°		

ARRAY AREA & ROOF AREA CALC'S				
ROOF	# OF MODULES	ARRAY AREA (Sq. Ft.)	ROOF AREA (Sq. Ft.)	ROOF AREA COVERED BY ARRAY (%)
#1	12	219.60	320.87	68
#2	12	219.60	335.97	65

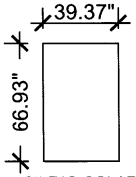

SILFAB SOLAR
SIL-320 BL
(320 WATT)

(SAF) SOLAR ATTIC FAN

NOTES:
- THE LOCATION OF THE SAF SHOULD BE DETERMINED ON SITE.
- THE SAF SHOULD BE LOCATED 30"-36" FROM THE PEAK OF THE ROOF OR ABOUT 5 ROWS DOWN FROM THE RIDGE.
- THE SAF SHOULD NOT BE MOUNTED ON ANY STRUCTURAL MEMBER LIKE TRUSS/RAFTER.
- "CAN VENTS" CAN BE REPLACED BY SAF.
- SAF CANNOT BE MOUNTED ON A METAL ROOF. PLEASE CARRY GABLE VENT FANS FOR METAL ROOF INSTALLATION (IF APPLICABLE).

LEGEND

- SD - SOLADECK
- INV - INVERTER
- ACD - AC DISCONNECT
- MSP - MAIN SERVICE PANEL
- BLP - BACKUP LOAD PANEL
- BAT - BATTERY
- OP - PV LINK OPTIMIZER
- VENT, ATTIC FAN (ROOF OBSTRUCTION)
- ROOF ATTACHMENT
- RAFTERS
- CONDUIT
- RAPID SHUTDOWN

POWERHOME
POWER HOME SOLAR, LLC
"POWER YOUR FUTURE"
919 N. MAIN ST.
MOORESVILLE, NC 28115
Phone: 704-800-8591 (OFFICE)
Email: info@powerhome.com
Web: www.powerhome.com

REVISIONS

DESCRIPTION	DATE	REV

Signature with Seal

DATE: 6/16/2020

PROJECT NAME & ADDRESS

STEVEN RUZUMNA RESIDENCE
850 FOREST AVE.,
BIRMINGHAM, MI 48009

SHEET NAME
ROOF PLAN & MODULES

SHEET SIZE
ANSI B
11" X 17"

SHEET NUMBER
PV-2

FOREST AVE.

(E) FRONT OF RESIDENCE

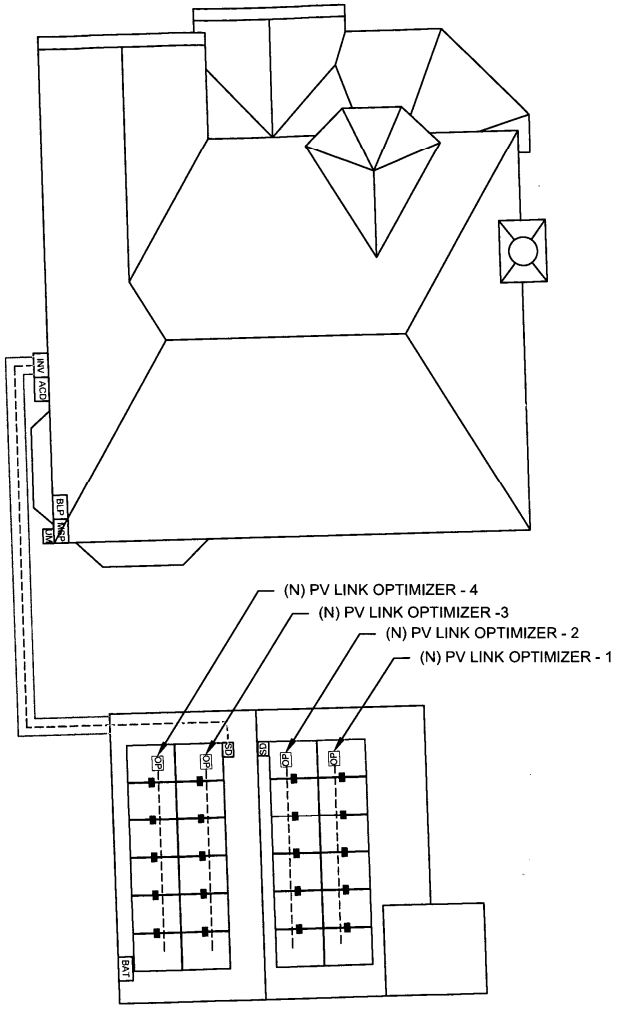

(E) BACK OF RESIDENCE

1 ROOF PLAN WITH STRING LAYOUT

PV-2A

SCALE: 3/32" = 1'-0"

BILL OF MATERIALS		
EQUIPMENT	QTY	DESCRIPTION
SOLAR PV MODULE	24	SILFAB SOLAR SIL-320 BL MODULES
OPTIMIZER	04	GENERAC PV LINK S2502 POWER OPTIMIZERS
GENERAC SNAP RS	24	GENERAC SNAPRS MODEL RS801
INVERTER	01	GENERAC PWRCELL X7602 7600W INVERTER
AC DISCONNECT	1	60A FUSED, (2) 40A FUSES, 240V, NEMA 3R, UL LISTED
SOLADECK	2	SOLADECKS 600 V, NEMA 3R, UL LISTED
BATTERY	1	GENERAC PWRCELL9 BATTERY
BACKUP PANEL	1	125A, BACKUP PANEL, 240V
RAILS	12	QRAIL LIGHT 14 FT. BLACK
SPLICE KIT	8	QSPLICE INTERNAL LIGHT
WEEB BMC	0	WEEB BMC MILL
MODULE CLAMPS	40	UNIVERSAL MID CLAMP
GROUNDING LUG	4	WEEB LUG W/ T-BOLT
END CLAMPS	16	UNIVERSAL END CLAMPS
ATTACHMENT	53	L-MOUNT ATTACHMENT (QUICKMOUNT)
T-BOLT	57	T-BOLT W/ NUT M8 X 20MM

POWERHOME

POWER HOME SOLAR, LLC
"POWER YOUR FUTURE"
919 N. MAIN ST.
MOORESVILLE, NC 28115
Phone: 704-800-6591 (OFFICE)
Email: info@powerhome.com
Web: www.powerhome.com

REVISIONS

DESCRIPTION	DATE	REV

Signature with Seal

DATE: 6/16/2020

PROJECT NAME & ADDRESS

STEVEN RUZUMNA RESIDENCE
850 FOREST AVE.,
BIRMINGHAM, MI 48009

SHEET NAME
STRING LAYOUT

SHEET SIZE
ANSI B
11" X 17"

SHEET NUMBER
PV-2A

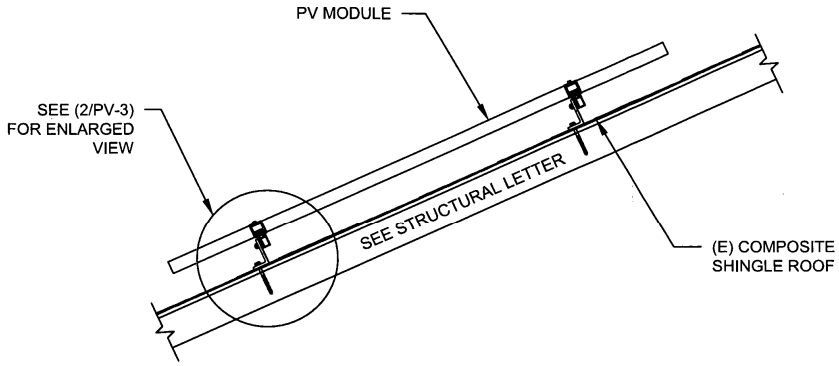

1 ATTACHMENT DETAIL

PV-3 SCALE: 1" = 1'-0"

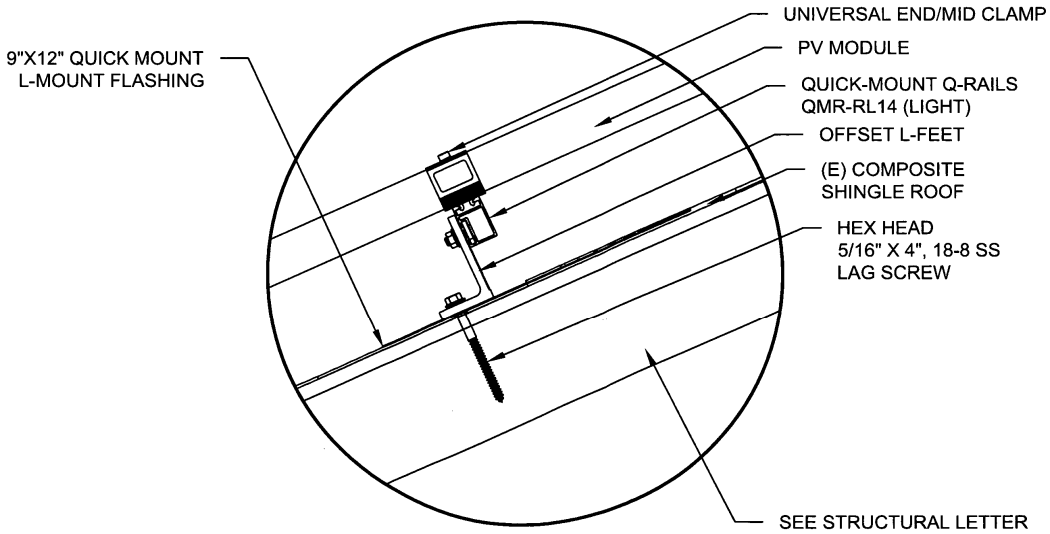

2 ATTACHMENT DETAIL (enlarged view)

PV-3 SCALE: NTS

POWERHOME
POWER HOME SOLAR, LLC
"POWER YOUR FUTURE"
919 N. MAIN ST.
MOORESVILLE, NC 28115
Phone: 704-800-6591 (OFFICE)
Email: info@powerhome.com
Web: www.powerhome.com

REVISIONS

DESCRIPTION	DATE	REV

Signature with Seal

DATE: 6/16/2020

PROJECT NAME & ADDRESS

STEVEN RUZUMNA
RESIDENCE
850 FOREST AVE.,
BIRMINGHAM, MI 48009

SHEET NAME
ATTACHMENT
DETAIL

SHEET SIZE
ANSI B
11" X 17"

SHEET NUMBER
PV-3

(24) SILFAB SOLAR SIL-320 BL MODULES
(4) PV LINKS OF 6 MODULES CONNECTED IN SERIES

SERVICE INFO

UTILITY PROVIDER:	DTE ENERGY
MAIN SERVICE VOLTAGE:	240V
MAIN PANEL BRAND:	SIEMENS
MAIN SERVICE PANEL:	200A
MAIN CIRCUIT BREAKER RATING:	200A
MAIN SERVICE LOCATION:	WEST
SERVICE FEED SOURCE:	OVERHEAD

WIRE LEGEND

- PV ARRAY +VE CONDUCTOR AND L1
- PV ARRAY -VE CONDUCTOR AND L2
- NEUTRAL CONDUCTOR
- EGC AND GEC
- SINGLE TWISTED PAIR, CAT 5 WIRE

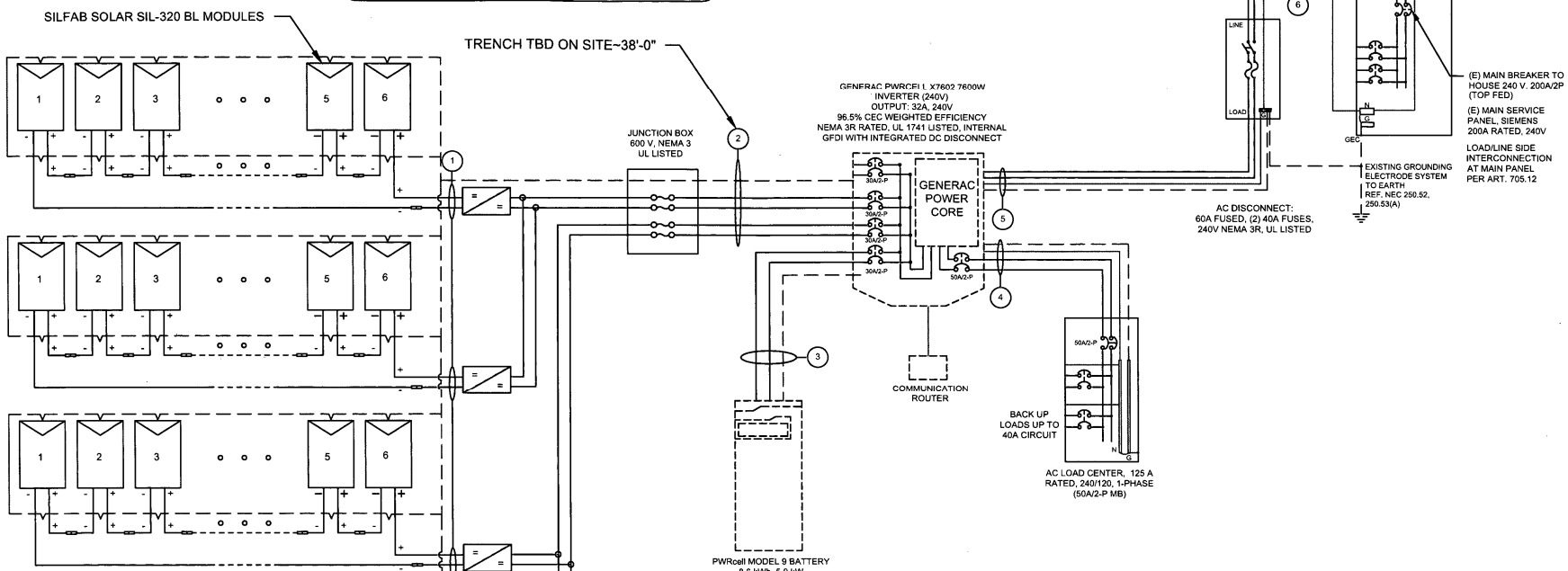

SNAP RS (RS801)
MAX INPUT CURRENT - 13 A
UL 1741 LISTED
MODULE LEVEL RAPID SHUTDOWN (PVRSS) COMPLIANT
NEMA 6P RATED

PVLINK SUBSTRING OPTIMIZER (S2502)
RATED POWER : 2500W
MPPT VOLTAGE RANGE: 60 TO 360 V
MAX OUTPUT VOLTAGE: 420V
MAX OUTPUT CURRENT: 8A
RAPID SHUTDOWN COMPLIANT
GROUND-FAULT PROTECTION COMPLIANT

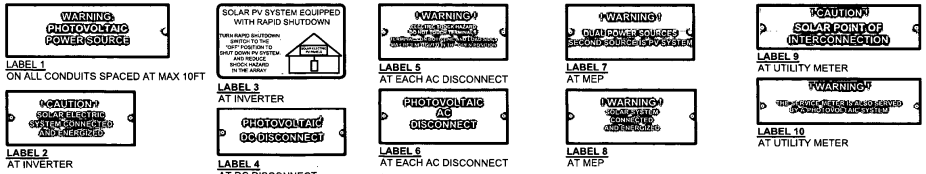

AC DISCONNECT TO BE PLACED WITHIN 5 FEET OF THE METER AS PER DTE ENERGY

	QTY	CONDUCTOR INFORMATION		CONDUIT TYPE	CONDUIT SIZE
1	(8)	#10AWG -	PV WIRE/USE-2	N/A	N/A
	(1)	#6AWG -	BARE COPPER IN FREE AIR		
2	(4)	#10AWG -	THWN-2	IMC OR PVC IN TRENCH/ LFNC	3/4"
	(1)	#6AWG -	THWN-2 GND		
3	(2)	#10AWG -	THWN-2	EMT OR FLEX	3/4"
	(1)	#10AWG -	THWN-2 GND		
4	(3)	#6AWG -	THWN-2	EMT OR FLEX	3/4"
	(1)	#6AWG -	THWN-2 GND		
5	(3)	#6AWG -	THWN-2	EMT OR FLEX	3/4"
	(1)	#6AWG -	THWN-2 GND		
6	(3)	#6AWG -	THWN-2	EMT OR FLEX	3/4"

1 ELECTRICAL LINE DIAGRAM
PV-4 SCALE: NTS

POWERHOME
POWER HOME SOLAR, LLC
"POWER YOUR FUTURE"
919 N. MAIN ST.
MOORESVILLE, NC 28115
Phone: 704-800-6591 (OFFICE)
Email: info@powerhome.com
Web: www.powerhome.com

REVISIONS

DESCRIPTION	DATE	REV

Signature with Seal

DATE: 6/16/2020

PROJECT NAME & ADDRESS

STEVEN RUZUMNA RESIDENCE
850 FOREST AVE.,
BIRMINGHAM, MI 48009

SHEET NAME
ELECTRICAL LINE DIAGRAM

SHEET SIZE
ANSI B
11" X 17"

SHEET NUMBER
PV-4

PROJECT DESCRIPTION:

64 X 330 SILFAB SOLAR SIL-330 HL MODULES
ROOF MOUNTED SOLAR PHOTOVOLTAIC MODULES

SYSTEM SIZE:21.12 kW DC STC
ARRAY AREA: ROOF#1 - 384.30 SQ FT
ARRAY AREA: ROOF#2 - 237.90 SQ FT
ARRAY AREA: ROOF#3 - 146.40 SQ FT
ARRAY AREA: ROOF#4 - 146.40 SQ FT
ARRAY AREA: ROOF#5 - 109.80 SQ FT
ARRAY AREA: ROOF#6 - 73.20 SQ FT
ARRAY AREA: ROOF#7 - 73.20 SQ FT

AUTHORITIES HAVING JURISDICTION
BUILDING : OAKLAND COUNTY
ZONING : OAKLAND COUNTY
UTILITY : DTE ENERGY

EQUIPMENT SUMMARY
64 SILFAB SOLAR SIL-330 HL MODULES
10 GENERAC PV LINK S2502 POWER OPTIMIZERS
02 GENERAC PWRCELL X7602 INVERTERS

APPLICABLE CODES & STANDARDS
MICHIGAN RESIDENTIAL CODE 2015
NEC 2017

DESIGN SPECIFICATIONS
OCCUPANCY : II
CONSTRUCTION : SINGLE-FAMILY
ZONING : RESIDENTIAL
GROUND SNOW LOAD : SEE STRUCTURAL LETTER
WIND EXPOSURE : SEE STRUCTURAL LETTER
WIND SPEED : SEE STRUCTURAL LETTER

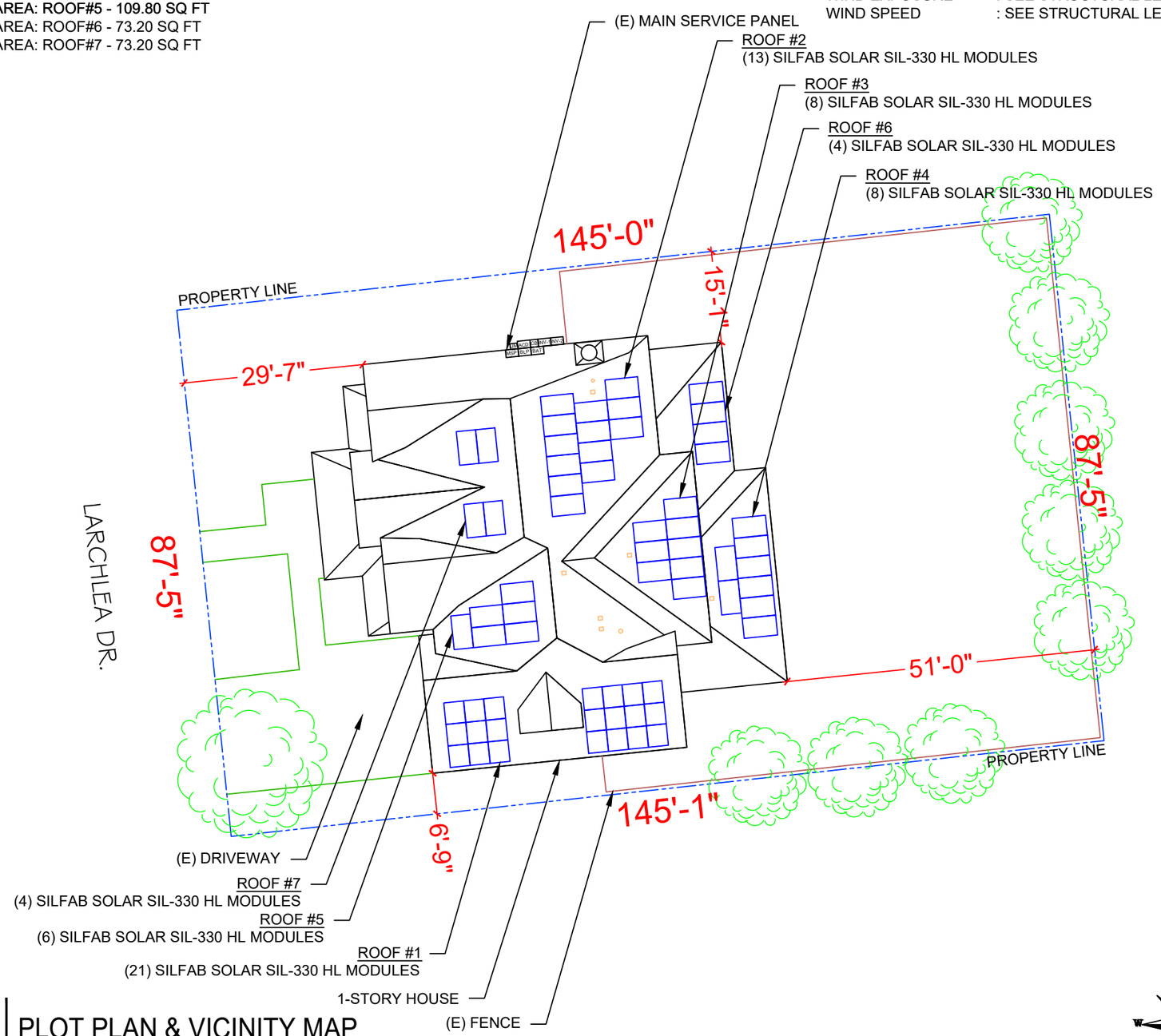

1 PLOT PLAN & VICINITY MAP
PV-1 SCALE: 1"=20'-0"

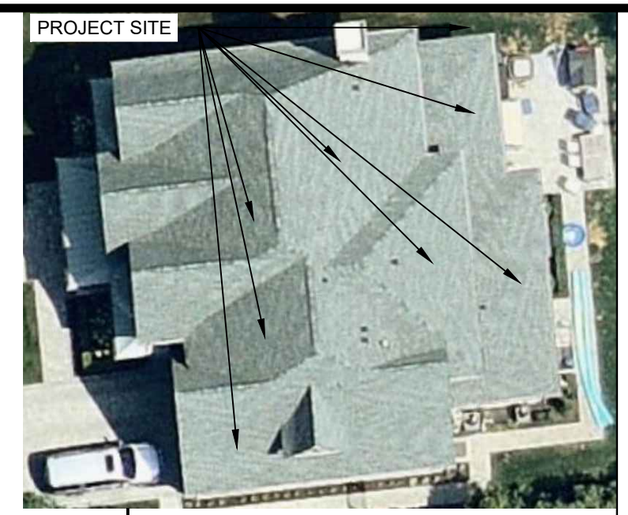

2 HOUSE PHOTO
PV-1 SCALE: NTS

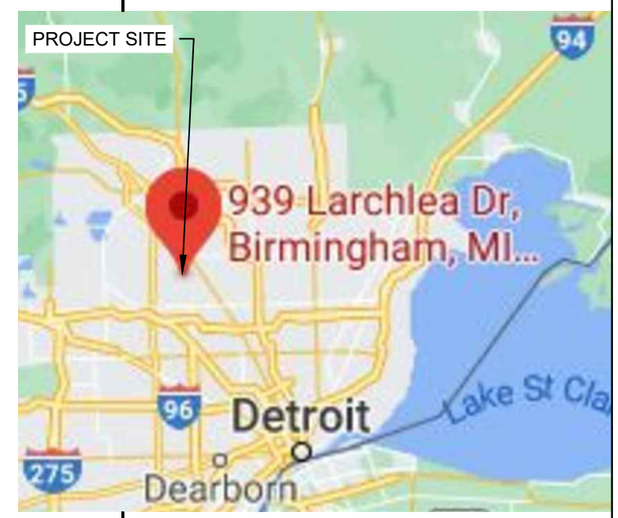

3 VICINITY MAP
PV-1 SCALE: NTS

SHEET INDEX

PV-1	PLOT PLAN & VICINITY MAP
PV-2	ROOF PLAN & MODULES
PV-2A	STRING LAYOUT
PV-3 to 3A	ATTACHMENT DETAIL
PV-4	ELECTRICAL LINE DIAGRAM
PV-5	WIRING CALCULATIONS
PV-5A	WIRING CALCULATIONS
PV-6 to 12A	EQUIPMENT SPECIFICATIONS

POWERHOME
POWER HOME SOLAR, LLC
"POWER YOUR FUTURE"
919 N. MAIN ST.
MOORESVILLE, NC 28115
Phone: 704-800-6591 (OFFICE)
Email: info@powerhome.com
Web: www.powerhome.com

REVISIONS

DESCRIPTION	DATE	REV

Signature with Seal

DATE: 1/25/2021

PROJECT NAME & ADDRESS
LAURIE M VANCE RESIDENCE
939 LARCHLEA DR.,
BIRMINGHAM, MI 48009

SHEET NAME
PLOT PLAN & VICINITY MAP

SHEET SIZE
ANSI B
11" X 17"

SHEET NUMBER
PV-1

MODULE TYPE, DIMENSIONS & WEIGHT

NUMBER OF MODULES = 64 MODULES
MODULE TYPE = SILFAB SOLAR SIL-330 HL MODULES
MODULE WEIGHT = 41.00 LBS / 18.6 KG.
MODULE DIMENSIONS = 66.93"x 39.37" = 18.30 SF
UNIT WEIGHT OF ARRAY = 2.24 PSF

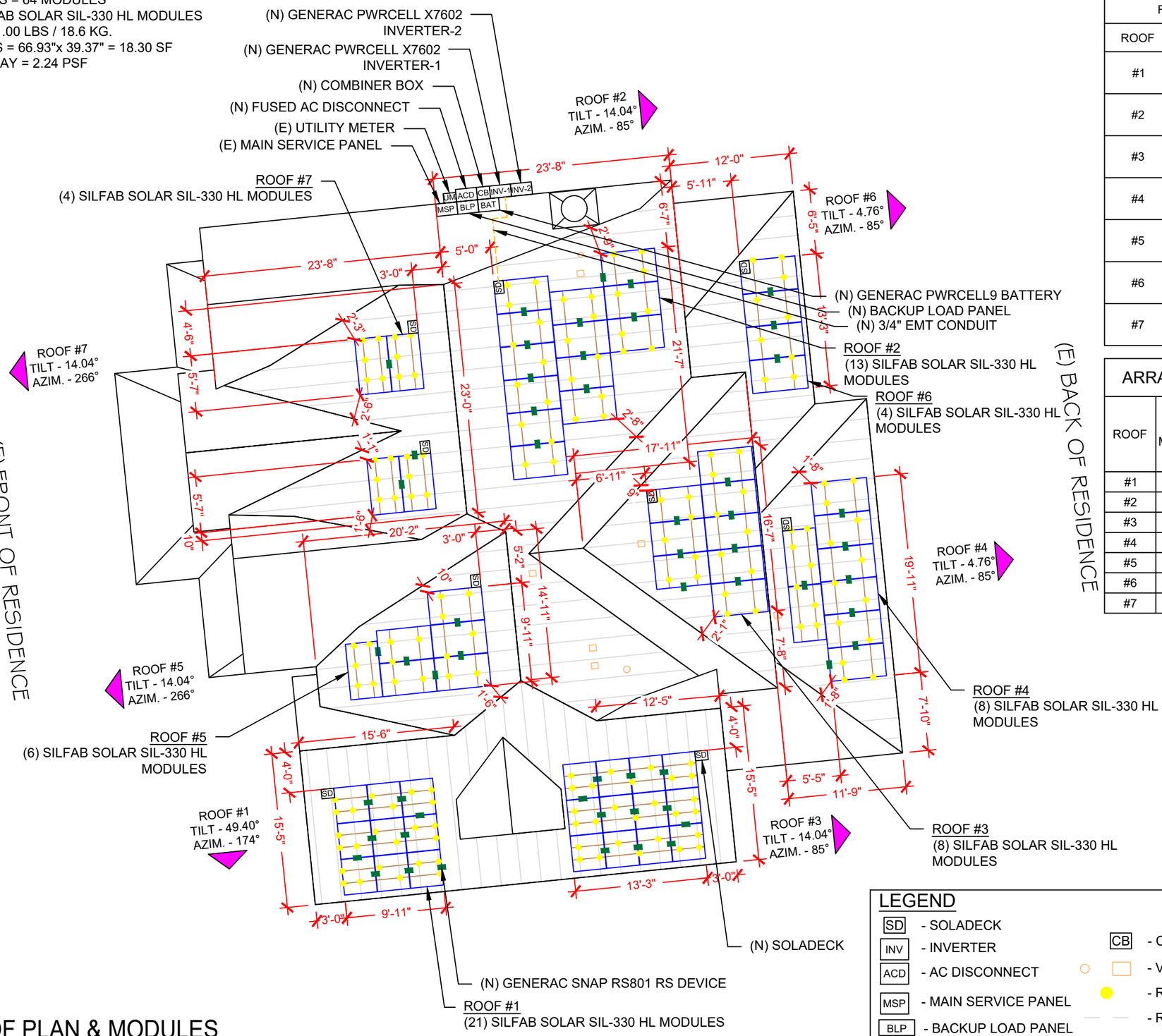

1 ROOF PLAN & MODULES
PV-2
SCALE: 3/32" = 1'-0"

ON- SITE CUSTOMER APPROVAL: _____

ROOF DESCRIPTION

ROOF TYPE			COMPOSITION SHINGLE	
ROOF	ROOF TILT	AZIMUTH	FRAMING SIZE	FRAMING SPACING
#1	49.40°	174°	SEE STRUCTURAL LETTER	
#2	14.04°	85°		
#3	14.04°	85°		
#4	4.76°	85°		
#5	14.04°	266°		
#6	4.76°	85°		
#7	14.04°	266°		

ARRAY AREA & ROOF AREA CALC'S

ROOF	# OF MODULES	ARRAY AREA (Sq. Ft.)	ROOF AREA (Sq. Ft.)	ROOF AREA COVERED BY ARRAY (%)
#1	21	384.30	684.31	56
#2	13	237.90	733.02	32
#3	8	146.40	283.44	52
#4	8	146.40	295.19	50
#5	6	109.80	246.05	45
#6	4	73.20	246.05	30
#7	4	73.20	342.65	21

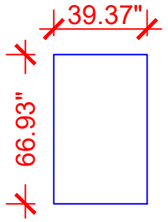

SILFAB SOLAR SIL-330 HL (330 WATT)

LEGEND

- SD - SOLADECK
- INV - INVERTER
- ACD - AC DISCONNECT
- MSP - MAIN SERVICE PANEL
- BLP - BACKUP LOAD PANEL
- BAT - BATTERY
- OP - PV LINK OPTIMIZER
- CB - COMBINER BOX
- VENT, ATTIC FAN (ROOF OBSTRUCTION)
- ROOF ATTACHMENT
- RAFTERS
- CONDUIT
- RAPID SHUTDOWN

POWERHOME
POWER HOME SOLAR, LLC
"POWER YOUR FUTURE"
919 N. MAIN ST.
MOORESVILLE, NC 28115
Phone: 704-800-6591 (OFFICE)
Email: info@powerhome.com
Web: www.powerhome.com

REVISIONS

DESCRIPTION	DATE	REV

Signature with Seal

DATE: 1/25/2021

PROJECT NAME & ADDRESS

LAURIE M VANCE RESIDENCE
939 LARCHLEA DR.,
BIRMINGHAM, MI 48009

SHEET NAME
ROOF PLAN & MODULES

SHEET SIZE
ANSI B
11" X 17"

SHEET NUMBER
PV-2

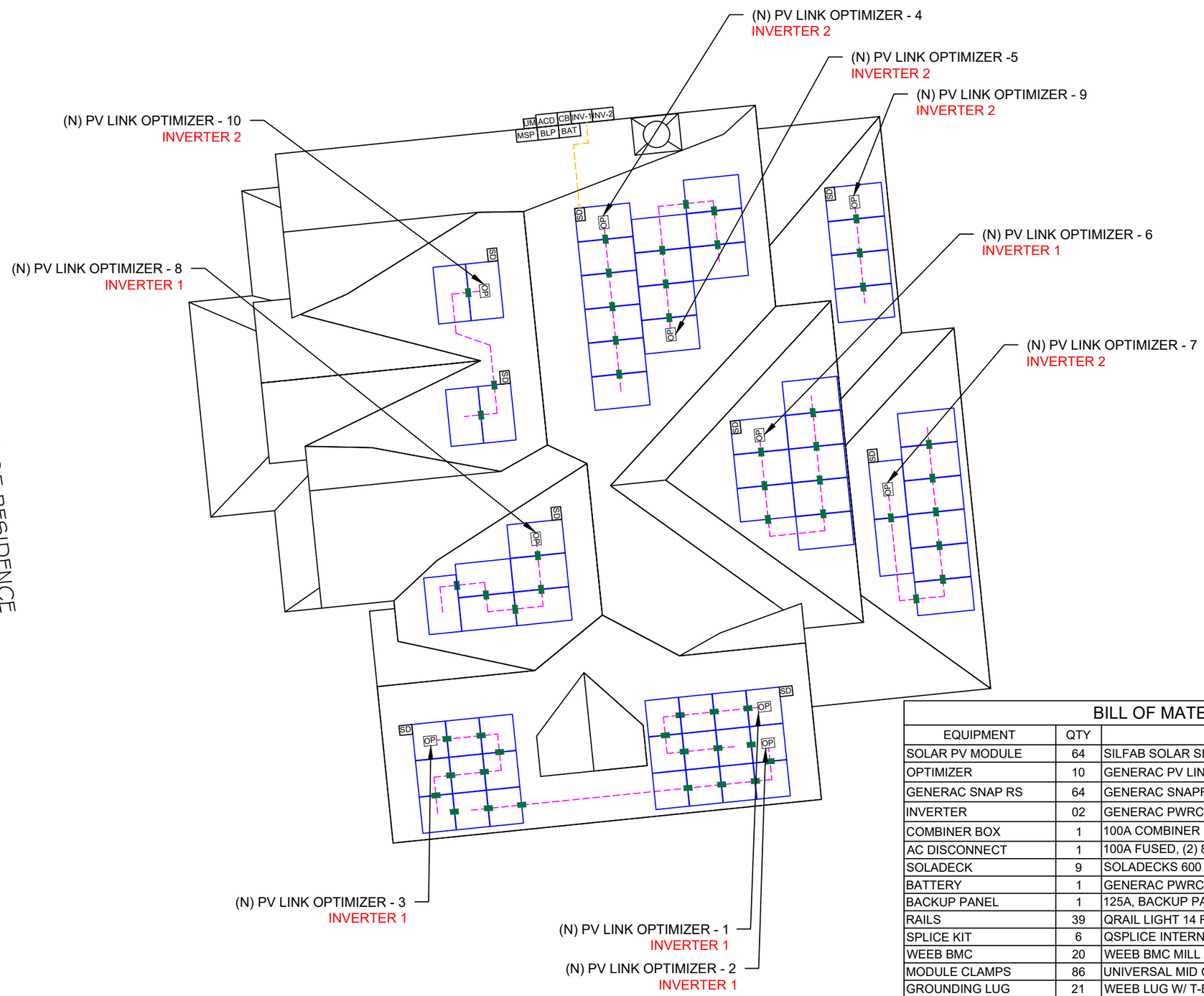

BILL OF MATERIALS		
EQUIPMENT	QTY	DESCRIPTION
SOLAR PV MODULE	64	SILFAB SOLAR SIL-330 HL MODULES
OPTIMIZER	10	GENERAC PV LINK S2502 POWER OPTIMIZERS
GENERAC SNAP RS	64	GENERAC SNAPRS MODEL RS801
INVERTER	02	GENERAC PWRCELL X7602 INVERTERS
COMBINER BOX	1	100A COMBINER SUBPANEL, 240V
AC DISCONNECT	1	100A FUSED, (2) 80A FUSES, 240V, NEMA 3R, UL LISTED
SOLADECK	9	SOLADECKS 600 V, NEMA 3R, UL LISTED
BATTERY	1	GENERAC PWRCELL9 BATTERY
BACKUP PANEL	1	125A, BACKUP PANEL, 240V
RAILS	39	QRAIL LIGHT 14 FT. BLACK
SPLICE KIT	6	QSPLICE INTERNAL LIGHT
WEEB BMC	20	WEEB BMC MILL
MODULE CLAMPS	86	UNIVERSAL MID CLAMP
GROUNDING LUG	21	WEEB LUG W/ T-BOLT
END CLAMPS	84	UNIVERSAL END CLAMPS
ATTACHMENT	94	L-MOUNT ATTACHMENT (QUICKMOUNT)
	74	E-MOUNT ATTACHMENT (QUICKMOUNT)
T-BOLT	168	T-BOLT W/ NUT M8 X 20MM

1 ROOF PLAN WITH STRING LAYOUT

PV-2A

SCALE: 3/32" = 1'-0"

POWERHOME
POWER HOME SOLAR, LLC
"POWER YOUR FUTURE"
919 N. MAIN ST.
MOORESVILLE, NC 28115
Phone: 704-800-6591 (OFFICE)
Email: info@powerhome.com
Web: www.powerhome.com

REVISIONS

DESCRIPTION	DATE	REV

Signature with Seal

DATE: 1/25/2021

PROJECT NAME & ADDRESS

LAURIE M VANCE RESIDENCE
939 LARCHLEA DR.,
BIRMINGHAM, MI 48009

SHEET NAME
STRING LAYOUT

SHEET SIZE
ANSI B
11" X 17"

SHEET NUMBER
PV-2A

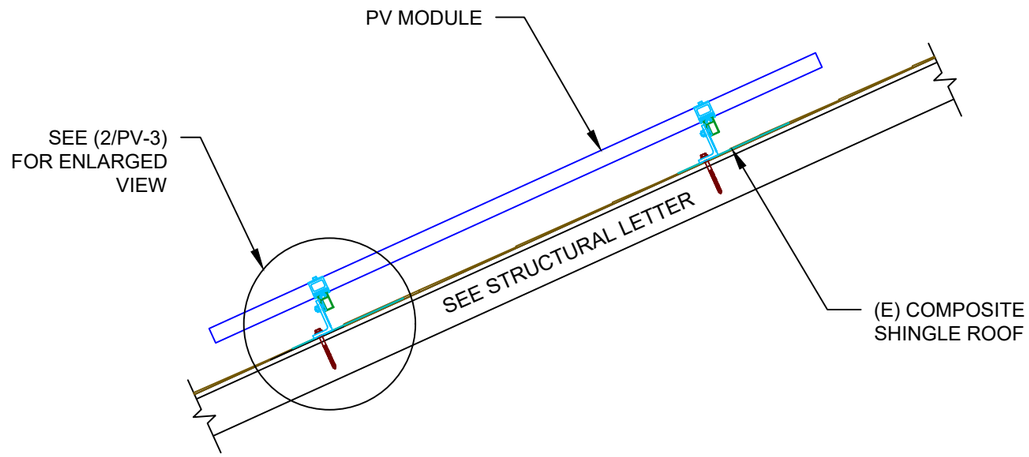

1 ATTACHMENT DETAIL

PV-3 SCALE: 1" = 1'-0"

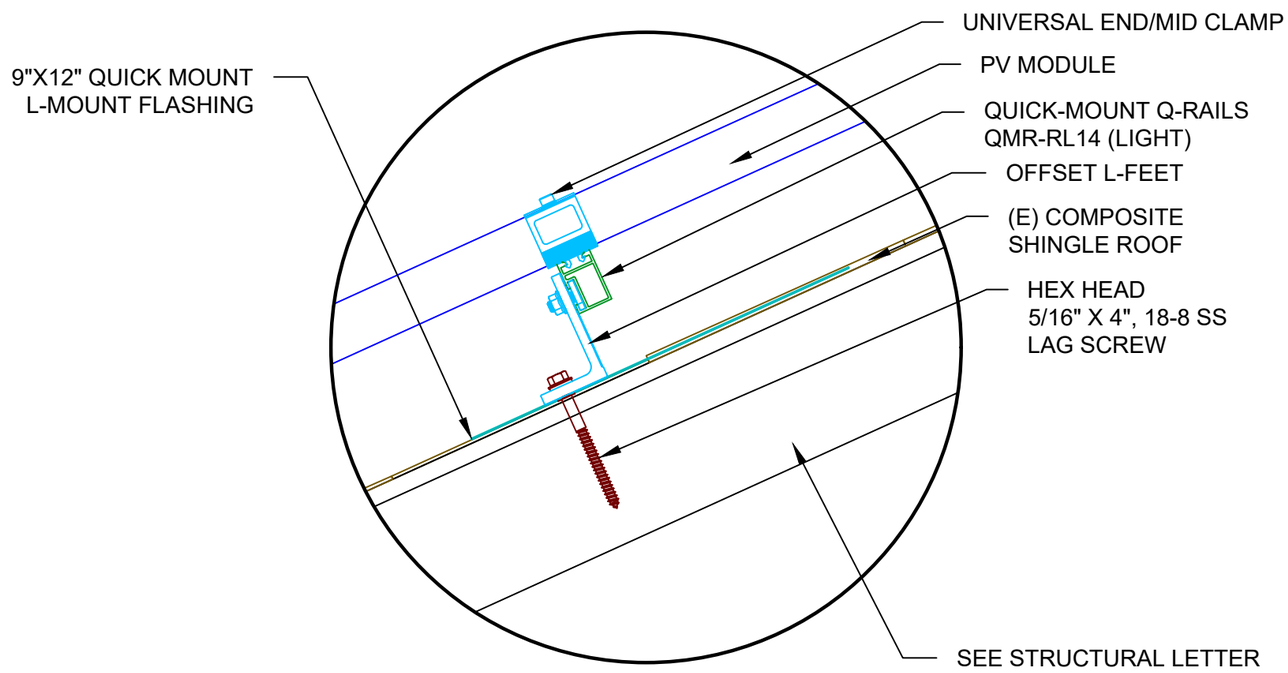

2 ATTACHMENT DETAIL (enlarged view)

PV-3 SCALE: NTS

POWERHOME
POWER HOME SOLAR, LLC
"POWER YOUR FUTURE"
919 N. MAIN ST.
MOORESVILLE, NC 28115
Phone: 704-800-6591 (OFFICE)
Email: info@powerhome.com
Web: www.powerhome.com

REVISIONS

DESCRIPTION	DATE	REV

Signature with Seal

DATE: 1/25/2021

PROJECT NAME & ADDRESS

LAURIE M VANCE RESIDENCE
939 LARCHLEA DR.,
BIRMINGHAM, MI 48009

SHEET NAME
ATTACHMENT DETAIL

SHEET SIZE
ANSI B
11" X 17"

SHEET NUMBER
PV-3

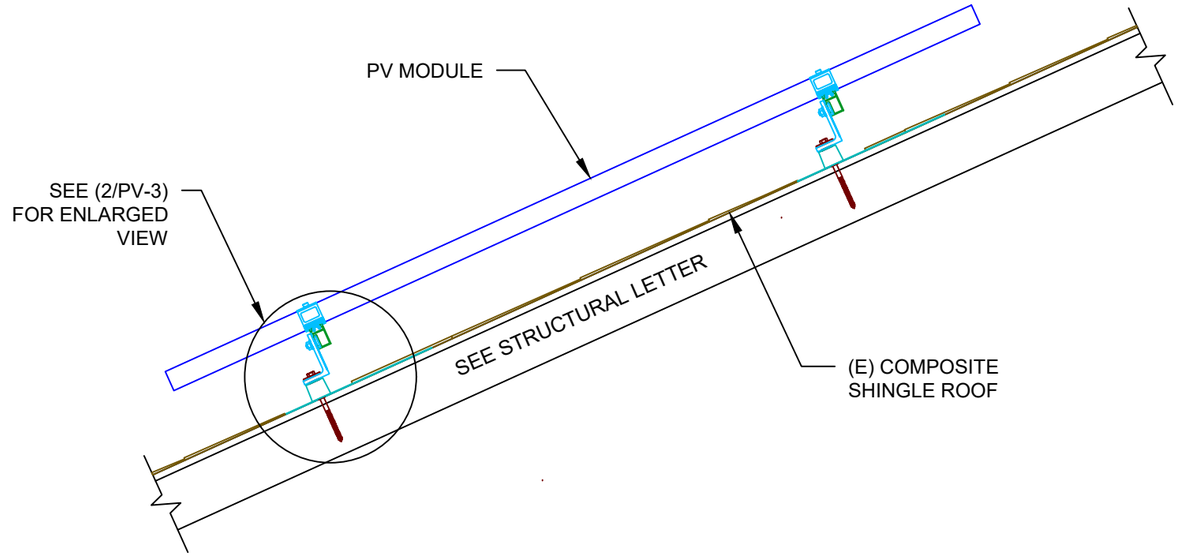

1 ATTACHMENT DETAIL

PV-3A SCALE: 1" = 1'-0"

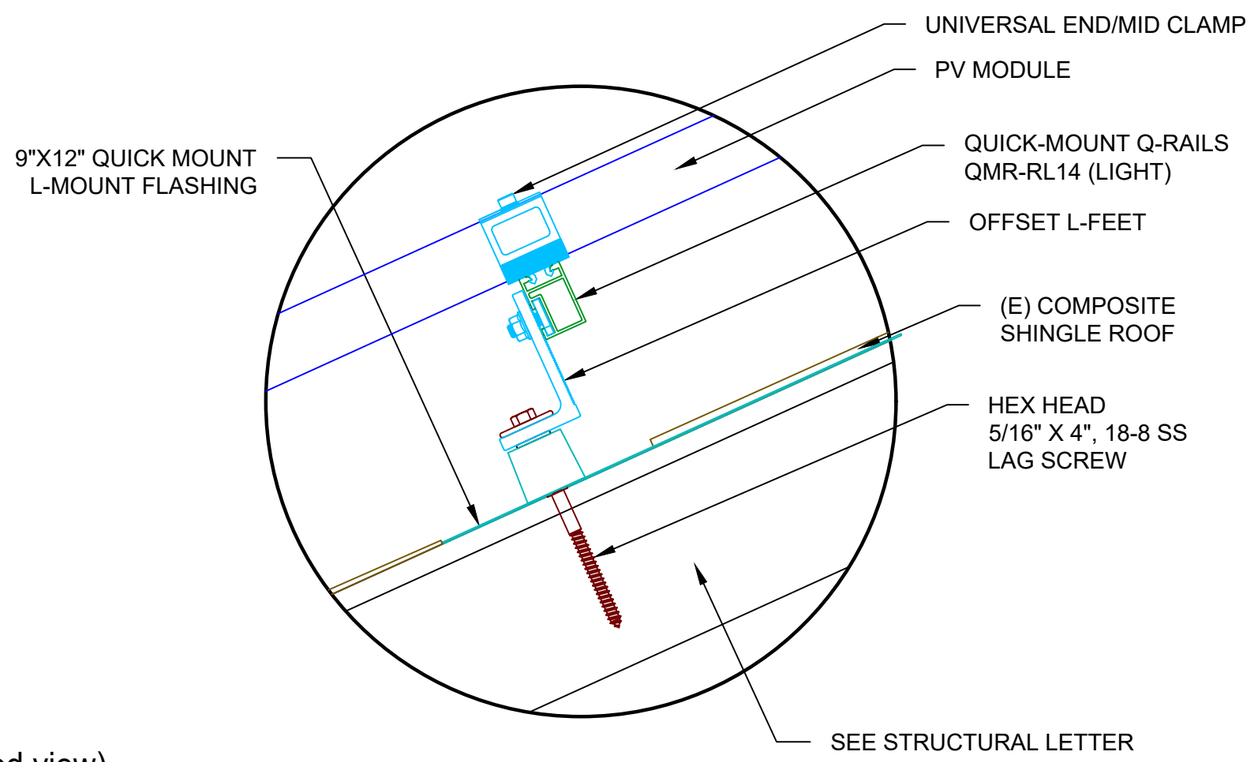

2 ATTACHMENT DETAIL (enlarged view)

PV-3A SCALE: NTS

POWERHOME
POWER HOME SOLAR, LLC
"POWER YOUR FUTURE"
919 N. MAIN ST.
MOORESVILLE, NC 28115
Phone: 704-800-6591 (OFFICE)
Email: info@powerhome.com
Web: www.powerhome.com

REVISIONS

DESCRIPTION	DATE	REV

Signature with Seal

DATE: 1/25/2021

PROJECT NAME & ADDRESS

LAURIE M VANCE RESIDENCE
939 LARCHLEA DR.,
BIRMINGHAM, MI 48009

SHEET NAME
ATTACHMENT DETAIL

SHEET SIZE
ANSI B
11" X 17"

SHEET NUMBER
PV-3A

WIRE LEGEND

- PV ARRAY +VE CONDUCTOR AND L1
- PV ARRAY -VE CONDUCTOR AND L2
- NEUTRAL CONDUCTOR
- EGC AND GEC
- SINGLE TWISTED PAIR, CAT 5 WIRE

(64) SILFAB SOLAR SIL-330 HL MODULES
INVERTER 1- (1) PV LINK OF 8 MODULES &
(3) PV LINKS OF 7 MODULES &
(1) PV LINK OF 6 MODULES CONNECTED IN SERIES
INVERTER 2- (1) PV LINK OF 8 MODULES &
(1) PV LINK OF 7 MODULES &
(1) PV LINK OF 6 MODULES &
(2) PV LINKS OF 4 MODULES CONNECTED IN SERIES

SERVICE INFO

UTILITY PROVIDER:	DTE ENERGY
MAIN SERVICE VOLTAGE:	240V
MAIN PANEL BRAND:	SIEMENS
MAIN SERVICE PANEL:	200A
MAIN CIRCUIT BREAKER RATING:	200A
MAIN SERVICE LOCATION:	NORTH-WEST
SERVICE FEED SOURCE:	UNDERGROUND

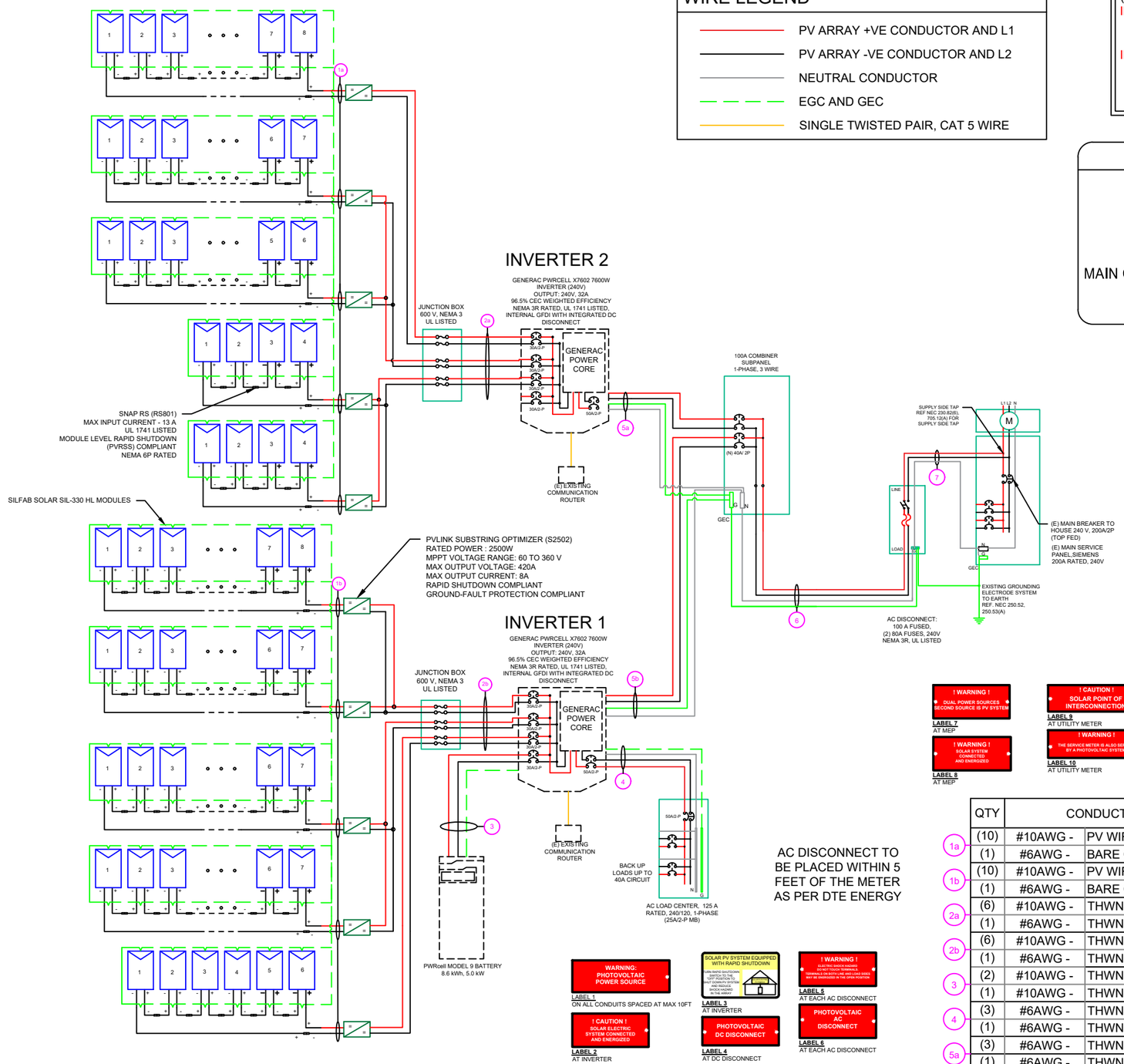

AC DISCONNECT TO BE PLACED WITHIN 5 FEET OF THE METER AS PER DTE ENERGY

! WARNING ! DUAL POWER SOURCES SECOND SOURCE IS PV SYSTEM
LABEL 7 AT MEP

! WARNING ! SOLAR SYSTEM CONNECTED AND ENERGIZED
LABEL 8 AT MEP

! CAUTION ! SOLAR POINT OF INTERCONNECTION
LABEL 9 AT UTILITY METER

! WARNING ! THE SERVICE METER IS ALSO SERVED BY A PHOTOVOLTAIC SYSTEM
LABEL 10 AT UTILITY METER

WARNING: PHOTOVOLTAIC POWER SOURCE
LABEL 1 ON ALL CONDUITS SPACED AT MAX 10FT

! CAUTION ! SOLAR ELECTRIC SYSTEM CONNECTED AND ENERGIZED
LABEL 2 AT INVERTER

SOLAR PV SYSTEM EQUIPPED WITH RAPID SHUTDOWN
TURN RAPID SHUTDOWN SWITCH TO THE "OFF" POSITION TO SHUT DOWN PV SYSTEM AND REDUCE SHOCK HAZARD IN THE ARRAY
LABEL 3 AT INVERTER

PHOTOVOLTAIC DC DISCONNECT
LABEL 4 AT DC DISCONNECT

! WARNING ! ELECTRIC SHOCK HAZARD DO NOT TOUCH TERMINALS TERMINALS ON BOTH LINE AND LOAD SIDES MAY BE ENERGIZED IN THE OPEN POSITION
LABEL 5 AT EACH AC DISCONNECT

PHOTOVOLTAIC AC DISCONNECT
LABEL 6 AT EACH AC DISCONNECT

	QTY	CONDUCTOR INFORMATION		CONDUIT TYPE	CONDUIT SIZE
1a	(10)	#10AWG -	PV WIRE/USE-2	N/A	N/A
	(1)	#6AWG -	BARE COPPER IN FREE AIR		
1b	(10)	#10AWG -	PV WIRE/USE-2	N/A	N/A
	(1)	#6AWG -	BARE COPPER IN FREE AIR		
2a	(6)	#10AWG -	THWN-2	EMT OR FLEX IN ATTIC	3/4"
	(1)	#6AWG -	THWN-2 GND		
2b	(6)	#10AWG -	THWN-2	EMT OR FLEX IN ATTIC	3/4"
	(1)	#6AWG -	THWN-2 GND		
3	(2)	#10AWG -	THWN-2	EMT OR FLEX	3/4"
	(1)	#10AWG -	THWN-2 GND		
4	(3)	#6AWG -	THWN-2	EMT OR FLEX	3/4"
	(1)	#6AWG -	THWN-2 GND		
5a	(3)	#6AWG -	THWN-2	EMT OR FLEX	3/4"
	(1)	#6AWG -	THWN-2 GND		
5b	(3)	#6AWG -	THWN-2	EMT OR FLEX	3/4"
	(1)	#6AWG -	THWN-2 GND		
6	(2)	#4AWG -	THWN-2	EMT OR FLEX	1"
	(1)	#6AWG -	THWN-2 NEUTRAL		
	(1)	#6AWG -	THWN-2 GND		
7	(2)	#4AWG -	THWN-2	EMT OR FLEX	1"
	(1)	#6AWG -	THWN-2 NEUTRAL		

1 ELECTRICAL LINE DIAGRAM
PV-4 SCALE: NTS

POWERHOME
POWER HOME SOLAR, LLC
"POWER YOUR FUTURE"
919 N. MAIN ST.
MOORESVILLE, NC 28115
Phone: 704-800-6591 (OFFICE)
Email: info@powerhome.com
Web: www.powerhome.com

REVISIONS

DESCRIPTION	DATE	REV

Signature with Seal

DATE: 1/25/2021

PROJECT NAME & ADDRESS

LAURIE M VANCE RESIDENCE
939 LARCHLEA DR.,
BIRMINGHAM, MI 48009

SHEET NAME
ELECTRICAL LINE DIAGRAM

SHEET SIZE
ANSI B
11" X 17"

SHEET NUMBER
PV-4

SOLAR MODULE SPECIFICATIONS	
MANUFACTURER / MODEL #	SILFAB SOLAR SIL-330 HL
VMP	33.70V
IMP	9.80A
VOC	40.10V
ISC	10.40A
TEMP. COEFF. VOC	-0.28%/°C
PTC RATING	307.56W
MODULE DIMENSION	66.93"L x 39.37"W x 1.50"D (In Inch)

INVERTER SPECIFICATIONS	
MANUFACTURER / MODEL #	GENERAC PWRCELL X7602
AC POWER OUTPUT (LOADS/GRID)	7600VA
AC POWER OUTPUT (BACKUP)	8000VA
NOMINAL OUTPUT VOLTAGE	240 VAC
MAX OUTPUT CURRENT @240V (LOADS/GRID)	32A
MAX OUTPUT CURRENT @240V (BACKUP)	50A
NOMINAL DC INPUT VOLTAGE	380Vdc
MAX DC INPUT VOLTAGE	420Vdc
CEC WEIGHTED EFFICIENCY	96.5%
MAX DC POWER (PV)	10000W
MAX INPUT CURRENT (PV)	20Adc
CONT. PEAK POWER (BATTERY)	8000W

2

SERIES SUB STRING OPTIMIZER SPECIFICATIONS	
MANUFACTURER / MODEL #	PV LINK S2502
RATED POWER	2500W
MPPT VOLTAGE RANGE	60-360 Vmp
MAXIMUM INPUT VOLTAGE	420Voc
MAXIMUM OUTPUT	420 Adc
NOMINAL OUTPUT	380 Vdc
MAXIMUM OUTPUT CURRENT	8 A
MAXIMUM SHORT CIRCUIT CURRENT	18 A

BATTERY SPECIFICATIONS	
MANUFACTURER / MODEL #	GENERAC PWRCELL9 BATTERY
USABLE ENERGY	8.6kWH
RATED CONTINUOUS POWER	3.4kW
POWER: 60 MINUTES	4.2kW
POWER: 2 MINUTES	5.0kW
REBUS VOLTAGE: INPUT/ OUTPUT	360-420Vdc
MODULE VOLTAGE	46.8Vdc
ROUND-TRIP EFFICIENCY	96.5%

AMBIENT TEMPERATURE SPECS	
RECORD LOW TEMP	-12°
AMBIENT TEMP (HIGH TEMP 2%)	34°
CONDUIT HEIGHT	0.5"
ROOF TOP TEMP	56°

CALCULATIONS FOR INVERTER 1

DC CONDUCTOR AMPACITY CALCULATIONS:
ARRAY TO PV LINK OPTIMIZER:

EXPECTED WIRE TEMP (In Celsius)	56°
TEMP. CORRECTION PER NEC TABLE 310.15 (B)(2)(a)	0.71
NO. OF CURRENT CARRYING CONDUCTORS	10
CONDUIT FILL CORRECTION PER NEC TABLE 310.15(B)(3)(a)	0.5
CIRCUIT CONDUCTOR SIZE	10 AWG
CIRCUIT CONDUCTOR AMPACITY PER NEC TABLE 310.15(B)(16)	40A

REQUIRED CIRCUIT CONDUCTOR AMPACITY PER NEC 690.8(A&B) 1.25 X Isc	10A
DERATED AMPACITY OF CIRCUIT CONDUCTOR TEMP. CORRECTION PER TABLE 310.15 (B)(2)(a) X CONDUIT FILL CORRECTION PER NEC 310.15(B)(3)(a) X CIRCUIT CONDUCTOR AMPACITY 310.15 (B)(16)	14.2A
Result should be greater than (10A) otherwise less the entry for circuit conductor size and ampacity	

FROM PV LINK OPTIMIZER TO INVERTER - 1:

EXPECTED WIRE TEMP (In Celsius)	56°
TEMP. CORRECTION PER NEC TABLE 310.15 (B)(2)(a)	0.71
NO. OF CURRENT CARRYING CONDUCTORS	6
CONDUIT FILL CORRECTION PER NEC TABLE 310.15(B)(3)(a)	0.8
CIRCUIT CONDUCTOR SIZE	10 AWG
CIRCUIT CONDUCTOR AMPACITY PER NEC TABLE 310.15(B)(16)	40A

REQUIRED CIRCUIT CONDUCTOR AMPACITY PER NEC 690.8(A&B) 1.25 X Isc X # of PV LINKS	20A
DERATED AMPACITY OF CIRCUIT CONDUCTOR TEMP. CORRECTION PER TABLE 310.15 (B)(2)(a) X CONDUIT FILL CORRECTION PER NEC 310.15(B)(3)(a) X CIRCUIT CONDUCTOR AMPACITY 310.15 (B)(16)	22.72A
Result should be greater than (20A) otherwise less the entry for circuit conductor size and ampacity	

AC CONDUCTOR AMPACITY CALCULATIONS:
FROM INVERTER - 1 TO COMBINER PANEL:

No. OF INVERTER	1
EXPECTED WIRE TEMP (In Celsius)	34°
TEMP. CORRECTION PER NEC TABLE 310.15(B)(2)(a)	0.96
NO. OF CURRENT CARRYING CONDUCTORS	3
CONDUIT FILL CORRECTION PER NEC TABLE 310.15(B)(3)(a)	1
CIRCUIT CONDUCTOR SIZE	6 AWG
CIRCUIT CONDUCTOR AMPACITY PER NEC TABLE 310.15(B)(16)	75A

REQUIRED CIRCUIT CONDUCTOR AMPACITY PER NEC 690.8(A&B) 1.25 X MAX INVERTER OUTPUT CURRENT (LOADS/ GRID)	40A
DERATED AMPACITY OF CIRCUIT CONDUCTOR TEMP. CORRECTION PER TABLE 310.15 (B)(2)(a) X CONDUIT FILL CORRECTION PER NEC 310.15(B)(3)(a) X CIRCUIT CONDUCTOR AMPACITY 310.15 (B)(16)	72A
Result should be greater than (40A) otherwise less the entry for circuit conductor size and ampacity	

CALCULATIONS FOR INVERTER 2

DC CONDUCTOR AMPACITY CALCULATIONS:
ARRAY TO PV LINK OPTIMIZER:

EXPECTED WIRE TEMP (In Celsius)	56°
TEMP. CORRECTION PER NEC TABLE 310.15 (B)(2)(a)	0.71
NO. OF CURRENT CARRYING CONDUCTORS	10
CONDUIT FILL CORRECTION PER NEC TABLE 310.15(B)(3)(a)	0.5
CIRCUIT CONDUCTOR SIZE	10 AWG
CIRCUIT CONDUCTOR AMPACITY PER NEC TABLE 310.15(B)(16)	40A

REQUIRED CIRCUIT CONDUCTOR AMPACITY PER NEC 690.8(A&B) 1.25 X Isc	10A
DERATED AMPACITY OF CIRCUIT CONDUCTOR TEMP. CORRECTION PER TABLE 310.15 (B)(2)(a) X CONDUIT FILL CORRECTION PER NEC 310.15(B)(3)(a) X CIRCUIT CONDUCTOR AMPACITY 310.15 (B)(16)	14.2A
Result should be greater than (10A) otherwise less the entry for circuit conductor size and ampacity	

FROM PV LINK OPTIMIZER TO INVERTER - 2:

EXPECTED WIRE TEMP (In Celsius)	56°
TEMP. CORRECTION PER NEC TABLE 310.15 (B)(2)(a)	0.71
NO. OF CURRENT CARRYING CONDUCTORS	6
CONDUIT FILL CORRECTION PER NEC TABLE 310.15(B)(3)(a)	0.8
CIRCUIT CONDUCTOR SIZE	10 AWG
CIRCUIT CONDUCTOR AMPACITY PER NEC TABLE 310.15(B)(16)	40A

REQUIRED CIRCUIT CONDUCTOR AMPACITY PER NEC 690.8(A&B) 1.25 X Isc X # of PV LINKS	20A
DERATED AMPACITY OF CIRCUIT CONDUCTOR TEMP. CORRECTION PER TABLE 310.15 (B)(2)(a) X CONDUIT FILL CORRECTION PER NEC 310.15(B)(3)(a) X CIRCUIT CONDUCTOR AMPACITY 310.15 (B)(16)	22.72A
Result should be greater than (20A) otherwise less the entry for circuit conductor size and ampacity	

AC CONDUCTOR AMPACITY CALCULATIONS:
FROM INVERTER - 2 TO COMBINER PANEL:

No. OF INVERTER	1
EXPECTED WIRE TEMP (In Celsius)	34°
TEMP. CORRECTION PER NEC TABLE 310.15(B)(2)(a)	0.96
NO. OF CURRENT CARRYING CONDUCTORS	3
CONDUIT FILL CORRECTION PER NEC TABLE 310.15(B)(3)(a)	1
CIRCUIT CONDUCTOR SIZE	6 AWG
CIRCUIT CONDUCTOR AMPACITY PER NEC TABLE 310.15(B)(16)	75A

REQUIRED CIRCUIT CONDUCTOR AMPACITY PER NEC 690.8(A&B) 1.25 X MAX INVERTER OUTPUT CURRENT (LOADS/ GRID)	40A
DERATED AMPACITY OF CIRCUIT CONDUCTOR TEMP. CORRECTION PER TABLE 310.15 (B)(2)(a) X CONDUIT FILL CORRECTION PER NEC 310.15(B)(3)(a) X CIRCUIT CONDUCTOR AMPACITY 310.15 (B)(16)	72A
Result should be greater than (40A) otherwise less the entry for circuit conductor size and ampacity	

POWERHOME
POWER HOME SOLAR, LLC
"POWER YOUR FUTURE"
919 N. MAIN ST.
MOORESVILLE, NC 28115
Phone: 704-800-6591 (OFFICE)
Email: info@powerhome.com
Web: www.powerhome.com

REVISIONS

DESCRIPTION	DATE	REV

Signature with Seal

DATE: 1/25/2021

PROJECT NAME & ADDRESS

LAURIE M VANCE RESIDENCE
939 LARCHLEA DR.,
BIRMINGHAM, MI 48009

SHEET NAME
WIRING CALCULATIONS

SHEET SIZE
ANSI B
11" X 17"

SHEET NUMBER
PV-5

SOLAR MODULE SPECIFICATIONS	
MANUFACTURER / MODEL #	SILFAB SOLAR SIL-330 HL
VMP	33.70V
IMP	9.80A
VOC	40.10V
ISC	10.40A
TEMP. COEFF. VOC	-0.28%/°C
PTC RATING	307.56W
MODULE DIMENSION	66.93"L x 39.37"W x 1.50"D (In Inch)

INVERTER SPECIFICATIONS	
MANUFACTURER / MODEL #	GENERAC PWRCELL X7602
AC POWER OUTPUT (LOADS/GRID)	7600VA
AC POWER OUTPUT (BACKUP)	8000VA
NOMINAL OUTPUT VOLTAGE	240 VAC
MAX OUTPUT CURRENT @240V (LOADS/GRID)	32A
MAX OUTPUT CURRENT @240V (BACKUP)	50A
NOMINAL DC INPUT VOLTAGE	380Vdc
MAX DC INPUT VOLTAGE	420Vdc
CEC WEIGHTED EFFICIENCY	96.5%
MAX DC POWER (PV)	10000W
MAX INPUT CURRENT (PV)	20Adc
CONT. PEAK POWER (BATTERY)	8000W

SERIES SUB STRING OPTIMIZER SPECIFICATIONS	
MANUFACTURER / MODEL #	PV LINK S2502
RATED POWER	2500W
MPPT VOLTAGE RANGE	60-360 Vmp
MAXIMUM INPUT VOLTAGE	420Voc
MAXIMUM OUTPUT	420 Adc
NOMINAL OUTPUT	380 Vdc
MAXIMUM OUTPUT CURRENT	8 A
MAXIMUM SHORT CIRCUIT CURRENT	18 A

AMBIENT TEMPERATURE SPECS	
RECORD LOW TEMP	-12°
AMBIENT TEMP (HIGH TEMP 2%)	34°
CONDUIT HEIGHT	0.5"
ROOF TOP TEMP	56°

FROM BATTERY TO INVERTER - 1:

EXPECTED WIRE TEMP (In Celsius)	34°
TEMP. CORRECTION PER NEC TABLE 310.15 (B)(2)(a)	0.96
NO. OF CURRENT CARRYING CONDUCTORS	2
CONDUIT FILL CORRECTION PER NEC TABLE 310.15(B)(3)(a)	1
CIRCUIT CONDUCTOR SIZE	10 AWG
CIRCUIT CONDUCTOR AMPACITY PER NEC TABLE310.15(B)(16)	40A

REQUIRED CIRCUIT CONDUCTOR AMPACITY PER NEC 690.8(A&B) 1.25 X Imax	26.25A
DERATED AMPACITY OF CIRCUIT CONDUCTOR TEMP. CORRECTION PER TABLE 310.15 (B)(2)(a) X CONDUIT FILL CORRECTION PER NEC 310.15(B)(3)(a) X CIRCUIT CONDUCTOR AMPACITY 310.15 (B)(16)	38.40A
Result should be greater than (26.25A) otherwise less the entry for circuit conductor size and ampacity	

AC CONDUCTOR AMPACITY CALCULATIONS:
FROM INVERTER - 1 TO BACK-UP PANEL:

No. OF INVERTER	1
EXPECTED WIRE TEMP (In Celsius)	34°
TEMP. CORRECTION PER NEC TABLE 310.15(B)(2)(a)	0.96
NO. OF CURRENT CARRYING CONDUCTORS	3
CONDUIT FILL CORRECTION PER NEC TABLE 310.15(B)(3)(a)	1
CIRCUIT CONDUCTOR SIZE	6 AWG
CIRCUIT CONDUCTOR AMPACITY PER NEC TABLE 310.15(B)(16)	75 A

REQUIRED CIRCUIT CONDUCTOR AMPACITY PER NEC 690.8(A&B) 1.25 X INVERTER OUTPUT CURRENT (BACKUP POWER)	40 A
DERATED AMPACITY OF CIRCUIT CONDUCTOR TEMP. CORRECTION PER TABLE 310.15 (B)(2)(a) X CONDUIT FILL CORRECTION PER NEC 310.15(B)(3)(a) X CIRCUIT CONDUCTOR AMPACITY 310.15 (B)(16)	72A
Result should be greater than (40A) otherwise less the entry for circuit conductor size and ampacity	

AC CONDUCTOR AMPACITY CALCULATIONS:
FROM COMBINER TO POI:

No. OF INVERTER	2
EXPECTED WIRE TEMP (In Celsius)	34°
TEMP. CORRECTION PER NEC TABLE 310.15(B)(2)(a)	0.96
NO. OF CURRENT CARRYING CONDUCTORS	3
CONDUIT FILL CORRECTION PER NEC TABLE 310.15(B)(3)(a)	1
CIRCUIT CONDUCTOR SIZE	4 AWG
CIRCUIT CONDUCTOR AMPACITY PER NEC TABLE 310.15(B)(16)	95A

REQUIRED CIRCUIT CONDUCTOR AMPACITY PER NEC 690.8(A&B) 1.25 X MAX INVERTER OUTPUT CURRENT (LOADS/GRID)	80A
DERATED AMPACITY OF CIRCUIT CONDUCTOR TEMP. CORRECTION PER TABLE 310.15 (B)(2)(a) X CONDUIT FILL CORRECTION PER NEC 310.15(B)(3)(a) X CIRCUIT CONDUCTOR AMPACITY 310.15 (B)(16)	91.2A
Result should be greater than (80A) otherwise less the entry for circuit conductor size and ampacity	

ELECTRICAL NOTES

1.) ALL EQUIPMENT TO BE LISTED BY UL OR OTHER NRTL, AND LABELED FOR ITS APPLICATION.
2.) ALL CONDUCTORS SHALL BE COPPER, RATED FOR 600 V AND 90 DEGREE C WET ENVIRONMENT.
3.) WIRING, CONDUIT, AND RACEWAYS MOUNTED ON ROOFTOPS SHALL BE ROUTED DIRECTLY TO, AND LOCATED AS CLOSE AS POSSIBLE TO THE NEAREST RIDGE, HIP, OR VALLEY.
4.) WORKING CLEARANCES AROUND ALL NEW AND EXISTING ELECTRICAL EQUIPMENT SHALL COMPLY WITH NEC 110.26.
5.) DRAWINGS INDICATE THE GENERAL ARRANGEMENT OF SYSTEMS. CONTRACTOR SHALL FURNISH ALL NECESSARY OUTLETS, SUPPORTS, FITTINGS AND ACESSORIES TO FULFILL APPLICABLE CODES AND STANDARDS.
6.) WHERE SIZES OF JUNCTION BOXES, RACEWAYS, AND CONDUITS ARE NOT SPECIFIED, THE CONTRACTOR SHALL SIZE THEM ACCORDINGLY.
7.) ALL WIRE TERMINATIONS SHALL BE APPROPRIATELY LABELED AND READILY VISIBLE.
8.) MODULE GROUNDING CLIPS TO BE INSTALLED BETWEEN MODULE FRAME AND MODULE SUPPORT RAIL, PER THE GROUNDING CLIP MANUFACTURER'S INSTRUCTION.
9.) MODULE SUPPORT RAIL TO BE BONDED TO CONTINUOUS COPPER G.E.C. VIA WEEB LUG OR ILSCO GBL-4DBT LAY-IN LUG.
10.) THE POLARITY OF THE GROUNDED CONDUCTORS IS NEGATIVE

POWERHOME
POWER HOME SOLAR, LLC
"POWER YOUR FUTURE"
919 N. MAIN ST.
MOORESVILLE, NC 28115
Phone: 704-800-6591 (OFFICE)
Email: info@powerhome.com
Web: www.powerhome.com

REVISIONS

DESCRIPTION	DATE	REV

Signature with Seal

DATE: 1/25/2021

PROJECT NAME & ADDRESS

LAURIE M VANCE RESIDENCE
939 LARCHLEA DR.,
BIRMINGHAM, MI 48009

SHEET NAME
WIRING CALCULATIONS

SHEET SIZE
ANSI B
11" X 17"

SHEET NUMBER
PV-5A

Silfab SOLAR

SIL-330 HL

BAA ARRA · 25 YEAR PRODUCT WARRANTY · AUTOMATED MANUFACTURING · JUST-IN-TIME · PVEL DNV·GL TOP PERFORMER · TIER 1 BANKABLE $$$ · HIGH EFFICIENCY

HIGH EFFICIENCY PREMIUM MONO-PERC PV MODULE

CE · Intertek · Intertek · IEC · Fraunhofer ISE

CHUBB
* Chubb provides error and omission insurance to Silfab Solar Inc.

INDUSTRY LEADING WARRANTY
All our products include an industry leading 25-year product workmanship and 30-year performance warranty.

35+ YEARS OF SOLAR INNOVATION
Leveraging over 35+ years of worldwide experience in the solar industry, Silfab is dedicated to superior manufacturing processes and innovations such as Bifacial and Back Contact technologies, to ensure our partners have the latest in solar innovation.

NORTH AMERICAN QUALITY
Silfab is the leading automated solar module manufacturer in North America. Utilizing premium quality materials and strict quality control management to deliver the highest efficiency, premium quality PV modules.

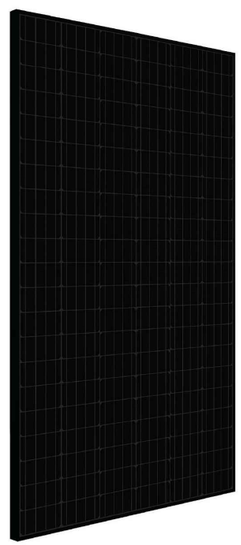

HALF-CELL TECHNOLOGY
Designed to improve the module's performance and durability.

BAA / ARRA COMPLIANT
Silfab panels are designed and manufactured to meet Buy American Act Compliance. The US State Department, US Military and FAA have all utilized Silfab panels in their solar installations.

LIGHT AND DURABLE
Engineered to accommodate high wind load conditions for test loads validated up to 4000Pa uplift. The light-weight frame is exclusively designed for wide-ranging racking compatibility and durability.

QUALITY MATTERS
Total automation ensures strict quality controls during the entire manufacturing process at our ISO certified facilities.

DOMESTIC PRODUCTION
Silfab Solar manufactures PV modules in two automated locations within North America. Our 500+ North American team is ready to help our partners win the hearts and minds of customers, providing customer service and product delivery that is direct, efficient and local.

AESTHETICALLY PLEASING
All black sleek design, ideal for high-profile residential or commercial applications.

PID RESISTANT
PID Resistant due to advanced cell technology and material selection. In accordance to IEC 62804-1.

Electrical Specifications		SIL-330 HL mono PERC	
Test Conditions		STC	NOCT
Module Power (Pmax)	Wp	330	236.3
Maximum power voltage (Vpmax)	V	33.7	31.3
Maximum power current (Ipmax)	A	9.8	7.5
Open circuit voltage (Voc)	V	40.1	37.9
Short circuit current (Isc)	A	10.4	7.9
Module efficiency	%	19.4	17.4
Maximum system voltage (VDC)	V	1000	
Series fuse rating	A	20	
Power Tolerance	Wp	0 to +10	

Measurement conditions: STC 1000 W/m² • AM 1.5 • Temperature 25 °C • NOCT 800 W/m² • AM 1.5 • Measurement uncertainty ≤ 3%
• Sun simulator calibration reference modules from Fraunhofer Institute. Electrical characteristics may vary by ±5% and power by 0 to +10W.

Temperature Ratings	SIL-330 HL mono PERC
Temperature Coefficient Isc	0.064 %/°C
Temperature Coefficient Voc	-0.28 %/°C
Temperature Coefficient Pmax	-0.36 %/°C
NOCT (± 2°C)	46 °C
Operating temperature	-40/+85 °C

Mechanical Properties and Components	SIL-330 HL mono PERC	
	Metric	Imperial
Module weight	18.6 kg ±0.2 kg	41 ±0.4 lbs
Dimensions (H x L x D)	1700 mm x 1000 mm x 38 mm	66.9 in x 39.4 in x 1.5 in
Maximum surface load (wind/snow)*	4000 Pa rear load / 5400 Pa front load N/m²	83.5/112.8 lb/ft^2
Hail impact resistance	ø 25 mm at 83 km/h	ø 1 in at 51.6 mph
Cells	120 Half Cells - Si mono PERC 5 busbar	120 Half Cells - Si mono PERC 5 busbar
Glass	3.2 mm high transmittance, tempered, DSM antireflective coating	0.126 in high transmittance, tempered, DSM antireflective coating
Cables and connectors (refer to installation manual)	1350 mm, ø 5.7 mm, MC4 from Staubli	53.1 in, ø 0.22 in (12AWG), , MC4 from Staubli
Backsheet	High durability, superior hydrolysis and UV resistance, multi-layer dielectric film, fluorine-free PV backsheet	
Frame	Anodized Aluminum (Black)	
Bypass diodes	3 diodes-30SQ045T (45V max DC blocking voltage, 30A max forward rectified current)	
Junction Box	UL 3730 Certified, IP67 rated	

Warranties	SIL-330 HL mono PERC		
Module product workmanship warranty	25 years**		
Linear power performance guarantee	30 years		
	≥ 97.1% end 1st year	≥ 91.6% end 12th year	≥ 85.1% end 25th year ≥ 82.6% end 30th year

Certifications	SIL-330 HL mono PERC
Product	ULC ORD C1703, UL1703, CEC listed***, UL 61215-1/-1-1/-2, UL 61730-1/-2, IEC 61215-1/-1-1/-2***. IEC 61730-1/-2***, CSA C22.2#61730-1/-2***, IEC 62716 Ammonia Corrosion; IEC61701:2011 Salt Mist Corrosion Certifed, UL Fire Rating: Type 2
Factory	ISO9001:2015

Modules Per Pallet: 26
Pallets Per Truck: 36
Modules Per Truck: 936

*⚠ Warning. Read the Safety and Installation Manual for mounting specifications and before handling, installing and operating modules.

**12 year extendable to 25 years subject to registration and conditions outlined under "Warranty" at www.silfabsolar.com.

***Certification in progress. August 2020 expected completion date for CEC listing,

IEC 61730/61215 and CSA C22.2#61730-1/-2.

Third-party generated pan files from Fraunhofer-Institute for Solar Energy Systems ISE are available for download at: www.silfabsolar.com/downloads

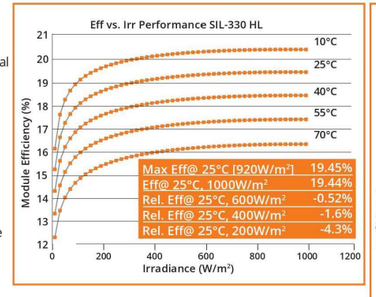

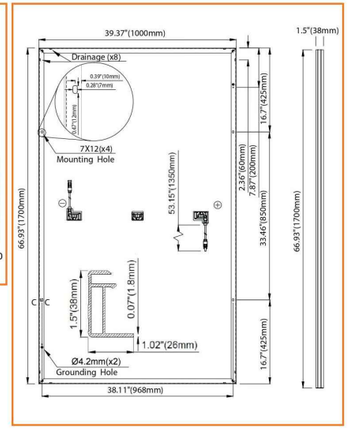

Silfab Solar Inc.
240 Courtneypark Drive East
Mississauga ON L5T 2Y3 Canada
Tel +1 905-255-2501 | Fax +1 905-696-0267
info@silfabsolar.com | www.silfabsolar.com

Silfab Solar Inc.
800 Cornwall Ave
Bellingham WA 98225 USA
Tel +1 360-569-4733

2020 TOP PERFORMER PVEL DNV·GL PV MODULE RELIABILITY SCORECARD

Silfab-SIL-330-HL-B-20200702 • No reproduction of any kind is allowed. Data and information is subject to modifications without notice. ©Silfab, 2020.

POWERHOME
POWER HOME SOLAR, LLC
"POWER YOUR FUTURE"
919 N. MAIN ST.
MOORESVILLE, NC 28115
Phone: 704-800-6591 (OFFICE)
Email: info@powerhome.com
Web: www.powerhome.com

REVISIONS

DESCRIPTION	DATE	REV

Signature with Seal

DATE: 1/25/2021

PROJECT NAME & ADDRESS

LAURIE M VANCE RESIDENCE
939 LARCHLEA DR.,
BIRMINGHAM, MI 48009

SHEET NAME
EQUIPMENT SPECIFICATION

SHEET SIZE
ANSI B
11" X 17"

SHEET NUMBER
PV-6

GENERAC

PWRcell

7.6kW 1Ø PWRcell Inverter with CTs
Model #: X7602 (Ordering SKU: APKE00014)

11.4 kW 3Ø PWRcell Inverter with CTs
Model #: X11402 (Ordering SKU: APKE00013

Intertek

Solar + storage is simple with the Generac PWRcell™ Inverter. This bi-directional, REbus™-powered inverter offers a simple, efficient design for integrating smart batteries with solar. Ideal for self-supply, backup power, zero-export and energy cost management, the PWRcell Inverter is the industry's most feature-rich line of inverters, available in single-phase and three-phase models.

FEATURES & BENEFITS

- Single inverter for grid-tied solar with smart battery integration
- Simplified system design: No autotransformer or battery inverter needed
- User-selectable modes for backup power, self-supply, time-of-use, zero-import and export limiting
- Free system monitoring included via PWRview™ Web Portal and Mobile App

AC OUTPUT/GRID-TIE	MODEL X7602	MODEL X11402
MAX. CONT. GRID-TIED AC POWER @ 50°C (122°F):	7600 W	11400 W
AC OUTPUT VOLTAGE:	120/240, 1Ø VAC	120/208, 3Ø VAC
AC FREQUENCY:	60 Hz	60 Hz
MAXIMUM CONTINUOUS OUTPUT CURRENT:	32 A, RMS	32 A, RMS
GROUND-FAULT ISOLATION DETECTION:	Included	Included
CHARGE BATTERY FROM AC:	Yes	Yes
THD (CURRENT):	< 2%	< 2%
TYPICAL NIGHTTIME POWER CONSUMPTION:	< 7 W	< 7 W

AC OUTPUT/ISLANDED	MODEL X7602	MODEL X11402
MAX. CONT. AC POWER @ 40°C (104°F) W/ SINGLE 6 MODULE BATTERY CABINET[1]:	9,000 W	9,000 W
MAX. CONT. AC POWER @ 40°C (104°F) WITH 2 BATTERY CABINETS (8 MODULES MINIMUM):	11,000 W	9,600-11,000 W[2]
MAX. CONT. AC POWER @ 50°C (122°F):	8,800 W	7,500-8,800 W[2]
PEAK MOTOR STARTING CURRENT (2 SEC):	50 A, RMS	
AC BACKUP OUTPUT VOLTAGE:	120/240, 1Ø VAC	120/208, 1Ø VAC
AC FREQUENCY:	60 Hz	60 Hz
THD (VOLTAGE):	< 2%	< 2%
AUTOMATIC SWITCHOVER TIME:	< 1 Seconds	< 1 Seconds

DC INPUT	MODEL X7602	MODEL X11402
DC INPUT VOLTAGE RANGE:	360-420 VDC	360-420 VDC
NOMINAL DC BUS VOLTAGE:	380 VDC	380 VDC
DC DISTRIBUTION INPUT BREAKERS:	4 x 2P30 A	4 x 2P30 A
MAX INPUT CURRENT PER DC INPUT:	30 A	30 A
REVERSE-POLARITY PROTECTION:	Yes	Yes
TRANSFORMERLESS, UNGROUNDED:	Yes	Yes
TYPICAL NIGHTTIME POWER CONSUMPTION:	< 7 W	< 7 W
DC BUS EXPORT FUSES (+/-):	40 A	40 A
2-POLE DISCONNECTION:	Yes	Yes

EFFICIENCY	MODEL X7602	MODEL X11402
PEAK EFFICIENCY:	97.3%	97.7%
CEC WEIGHTED EFFICIENCY:	96.5%	97.5%

[1] Peak Performance
[2] In Island mode X11402 protected loads only supply 2 phases 120 VAC L-N, 208 L-L which results in lower power than in grid tied 3 phase mode. The low value of the range is for full L-L loading while high value of the range is full L-N loading

Specifications

FEATURES AND MODES	
ISLANDING[3]:	Yes
GRID SELL:	Yes
SELF CONSUMPTION:	Yes
PRIORITIZED CHARGING FROM RENEWABLES:	Yes
GRID SUPPORT - ZERO EXPORT:	Yes
ESS PCS OPERATION MODES (IMPORT ONLY, EXPORT ONLY):	Yes

ADDITIONAL FEATURES	
SUPPORTED COMMUNICATION INTERFACES:	REbus™, CANbus, Ethernet
SYSTEM MONITORING:	PWRview™ Web Portal and Mobile App
BACKUP LOADS DISCONNECT[3]:	Yes, 50 A Circuit Breaker
INVERTER BYPASS SWITCH:	Automatic
WARRANTY:	10 Years

STANDARDS COMPLIANCE	
SAFETY:	UL 1741 SA, CSA 22.2, UL 1998
GRID CONNECTION STANDARDS:	IEEE 1547, Rule 21, Rule 14H, CSIP, UL 1741 PCS CRD (Import Only, Export Only)
EMISSIONS:	FCC Part 15 Class B

DIMENSIONS AND INSTALLATION SPECIFICATIONS	
ENCLOSURE KNOCKOUTS - QTY, SIZE - IN (MM):	6 x Combo 3/4" x 1" (19 x 25.4) 7 x Combo 1/2" x 3/4" (12.7 x 19)
DIMENSIONS L x W x H - IN (MM):	24.5" x 19.25" x 8" (622.3 x 488.9 x 203.2)
WEIGHT - LB (KG):	62.7 (28.4)
COOLING:	Forced convection
AUDIBLE NOISE:	< 40 dBA
OPERATING TEMPERATURE - FAHRENHEIT (CELSIUS):	-4 to 122 °F (-20 to 50 °C)[4]
PROTECTION RATING:	NEMA 3R

INSTALLATION GUIDELINES	
BATTERY TYPES SUPPORTED:	PWRcell™ Battery
MODULE STRING SIZE PER PV LINK OPTIMIZER:	Varies, refer to PV Link Installation Manual
MAXIMUM RECOMMENDED DC POWER FROM PV:	15 kW

[3] 3Ø inverters offer islanding for 1Ø loads.
[4] Includes ambient temperature rising from inverter operation. Reduced power at extreme temperatures.
Specifications listed in this document are achieved with firmware version 13310 or greater. Confirm inverter has latest firmware to ensure full performance.

Generac Power Systems, Inc.
S45 W29290 Hwy. 59, Waukesha, WI 53189
www.Generac.com | 888-GENERAC (436-3722)

A0000528185 REV E

©2020 Generac Power Systems. All rights reserved.
Specifications are subject to change without notice.

GENERAC

POWERHOME
POWER HOME SOLAR, LLC
"POWER YOUR FUTURE"
919 N. MAIN ST.
MOORESVILLE, NC 28115
Phone: 704-800-6591 (OFFICE)
Email: info@powerhome.com
Web: www.powerhome.com

REVISIONS

DESCRIPTION	DATE	REV

Signature with Seal

DATE: 1/25/2021

PROJECT NAME & ADDRESS

LAURIE M VANCE RESIDENCE
939 LARCHLEA DR.,
BIRMINGHAM, MI 48009

SHEET NAME
EQUIPMENT SPECIFICATION

SHEET SIZE
ANSI B
11" X 17"

SHEET NUMBER
PV-7

GENERAC

SnapRS™

Inline Disconnect Switch
Model: APKE00011
Certification Model Reference: RS801

Generac SnapRS are a simple way to satisfy rapid shutdown compliance for solar + storage systems. Generac SnapRS are 2017/2020 NEC 690.12 compliant, don't require any extra hardware to mount, and need no pairing or fussy digital communications.

FEATURES & BENEFITS

- Fast, easy, and simple to install
- One SnapRS device per PV module
- Achieves PVRSS Compliance
- Low cost, high efficiency solution

SYSTEM DESIGN

Snap a Generac SnapRS disconnect device (RS) to the negative lead (-) of each module in the solar array for simple module-level rapid shutdown compliance. SnapRS devices isolate array voltage when a rapid shutdown is initiated at a PWRcell™ Inverter. When rapid shutdown is initiated, SnapRS units isolate each PV module in the array, reducing array voltage to <80V in seconds.

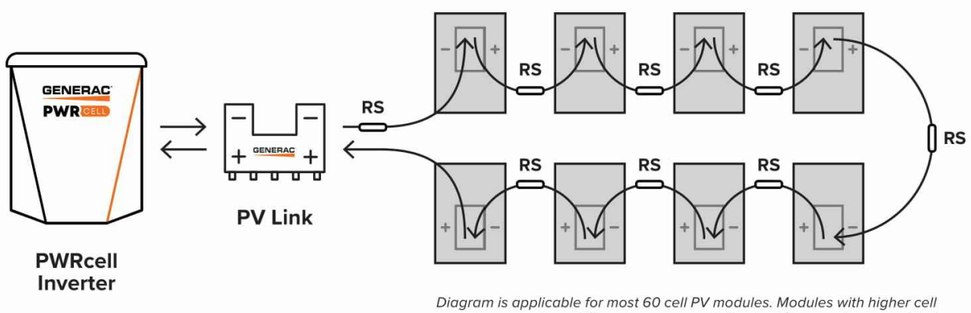

Diagram is applicable for most 60 cell PV modules. Modules with higher cell count may require a different arrangement. Contact Generac for more details.

Specifications

SnapRS™ (APKE00011)	
PV MODULE MAX VOC:	75 V
EFFICIENCY:	99.8%*
MAX INPUT CURRENT:	13 A
SHUTDOWN TIME:	< 10 Seconds
ENCLOSURE RATING:	NEMA 6P
OPERATING TEMPERATURE - FAHRENHEIT (CELSIUS):	-40 to 158 °F (-40 to 70 °C)
CERTIFICATIONS:	UL1741
PROTECTIONS:	PVRSE
WEIGHT - LB (KG):	0.17 (0.08)
DIMENSIONS, L x W x H - IN (MM):	7" x 1" x 1" (177.8 x 25.4 x 25.4)
WARRANTY:	25 Years

**When used with a 50V panel*

Connect one SnapRS device to the negative lead of each PV module in the PV Link controlled array for complete PV Rapid shutdown performance

Generac Power Systems, Inc.
S45 W29290 Hwy. 59, Waukesha, WI 53189
www.Generac.com | 888-GENERAC (436-3722)

A0000528183 REV C

©2020 Generac Power Systems. All rights reserved.
Specifications are subject to change without notice.

GENERAC

POWERHOME
POWER HOME SOLAR, LLC
"POWER YOUR FUTURE"
919 N. MAIN ST.
MOORESVILLE, NC 28115
Phone: 704-800-6591 (OFFICE)
Email: info@powerhome.com
Web: www.powerhome.com

REVISIONS

DESCRIPTION	DATE	REV

Signature with Seal

DATE: 1/25/2021

PROJECT NAME & ADDRESS

LAURIE M VANCE RESIDENCE
939 LARCHLEA DR.,
BIRMINGHAM, MI 48009

SHEET NAME
EQUIPMENT SPECIFICATION

SHEET SIZE
ANSI B
11" X 17"

SHEET NUMBER
PV-8

GENERAC

PWRcell

PWRcell Battery Cabinet (Ordering SKU: APKE00007)
2.85kWh PWRcell Battery Module
Model #: BJ-DCB05ZKAX (Ordering SKU: A0000391219)
PWRcell Battery Configuration Model #s:
PWRcell 9, PWRcell 12, PWRcell 15, PWRcell 17
PWRcell Spacer Kit (Ordering SKU: APKE00008)
PWRcell Upgrade Kit (Ordering SKU: APKE00009)

The PWRcell™ Battery Cabinet is a modular smart battery platform that allows for a range of configurations to suit any need, small or large. No other smart battery offers the power and flexibility of PWRcell. Whether for backup power or smart energy management, PWRcell has power and capacity options for every need, without sacrificing flexibility or function.

PWRcell BATTERY CABINET DESIGN

The PWRcell Battery Cabinet allows system owners the flexibility to scale from the economical 8.6kWh PWRcell 9 to the massive 17.1kWh PWRcell 17 by installing additional battery modules to the PWRcell Battery Cabinet. When needs change, an existing PWRcell Battery Cabinet can be upgraded with additional modules. Use the graphic below and the chart on the back of this sheet to understand what components you need for your chosen PWRcell configuration.

FEATURES & BENEFITS

- Connect 2 PWRcell Battery Cabinets to a single PWRcell Inverter for 34.2kWh of storage
- Best-in-class battery backup power
- Plug-and-play with PWRcell Inverter and PV Link™
- Time-of-use (TOU) and zero-export ready
- Residential and commercial application ready

BATTERY CONFIGURATION GUIDE

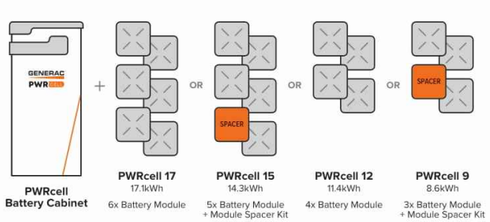

BATTERY CABINET ASSEMBLY

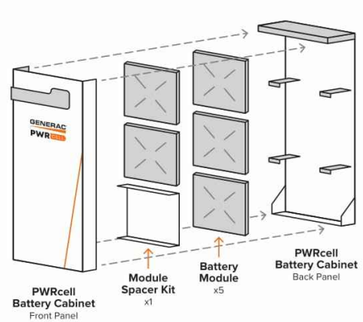

Specifications

PWRcell™ BATTERY CONFIGURATIONS	9	12	15	17
BATTERY MODULES:	3	4	5	6
USABLE ENERGY:	8.6kWh	11.4kWh	14.3kWh	17.1kWh
POWER - RATED CONTINUOUS:	3.4kW	4.5kW	5.6kW	6.7kW
POWER - 60 MINUTES:	4.2kW	5.6kW	7.0kW	8.4kW
POWER - 2 MINUTES:	5.0kW	6.7kW	8.4kW	10.0kW
REbus™ VOLTAGE - INPUT/OUTPUT:	360-420 VDC			
MODULE VOLTAGE:	46.8 VDC			
ROUND-TRIP EFFICIENCY:	96.50%			
OPERATING TEMPERATURE - FAHRENHEIT (CELSIUS):	41 to 113 °F (5 to 45 °C)			
RECOMMENDED AMBIENT TEMPERATURE - FAHRENHEIT (CELSIUS):	55 to 86 °F (13 to 30 °C)			
MAXIMUM INSTALLATION ALTITUDE - FT (M):	9834 (3000)			
DIMENSIONS, L x W x H - IN (MM):	22" x 10" x 68" (559 x 254 x 1727)			
WEIGHT, ENCLOSURE - LB (KG):	115 (52)			
WEIGHT, INSTALLED - LB (KG):	280 (127)	335 (152)	390 (178)	445 (202)
WARRANTY - LI-ION MODULES:	10 Years, (7.56MWh)			
WARRANTY - ELECTRONICS AND ENCLOSURE:	10 Years			
COMMUNICATION PROTOCOL:	REbus™ DC Nanogrid™			
COMPLIANCE:	UL 9540, UL 1973, UL 1642, CSA 22.2			

UPGRADING PWRcell

Inside of the PWRcell Battery Cabinet, battery modules are stacked two deep on three levels, allowing for up to six modules to be connected in series. You can upgrade an existing PWRcell Battery Cabinet by adding Battery Modules and a Module Spacer (APKE00008) if required. PWRcell 9 and PWRcell 15 require a module spacer.

Generac offers a convenient PWRcell Battery Upgrade Kit (APKE00009) to help replace lost or misplaced hardware. A PWRcell Battery Upgrade Kit may be purchased from your Generac distributor.

Refer to the table to the right for material requirements related to upgrading the PWRcell Battery Cabinet.

UPGRADE MATERIAL REQUIREMENTS

STARTING CONFIGURATION	ENDING CONFIGURATION: PWRcell 17	PWRcell 15	PWRcell 12
PWRcell 9	+ 3 x PWRCell Mod + 2 x APKE00009*	+ 2 x PWRCell Mod + 1 x APKE00009*	+ 1 x PWRCell Mod + 1 x APKE00009*
PWRcell 12	+ 2 x PWRCell Mod + 1 x APKE00009*	+ 1 x PWRCell Mod + 1 x APKE00008	
PWRcell 15	+ 1 x PWRCell Mod + 1 x APKE00009*		

**APKE00009 (Upgrade kit) only required if original hardware is unavailable*

Generac Power Systems, Inc.
S45 W29290 Hwy. 59, Waukesha, WI 53189
www.Generac.com | 888-GENERAC (436-3722)
A0000528139 REV D
©2020 Generac Power Systems. All rights reserved.
Specifications are subject to change without notice.

GENERAC

POWERHOME
POWER HOME SOLAR, LLC
"POWER YOUR FUTURE"
919 N. MAIN ST.
MOORESVILLE, NC 28115
Phone: 704-800-6591 (OFFICE)
Email: info@powerhome.com
Web: www.powerhome.com

REVISIONS

DESCRIPTION	DATE	REV

Signature with Seal

DATE: 1/25/2021

PROJECT NAME & ADDRESS

LAURIE M VANCE RESIDENCE
939 LARCHLEA DR.,
BIRMINGHAM, MI 48009

SHEET NAME
EQUIPMENT SPECIFICATION

SHEET SIZE
ANSI B
11" X 17"

SHEET NUMBER
PV-9

GENERAC

PV Link™

2500W MPPT Substring Optimizer
Model: APKE00010
Certification Model Reference: S2502

C ETL LISTED US
Intertek

PV Link is the simple solar optimizer for quick installation and long-lasting performance. Connect PV modules to each PV Link to overcome shading and challenging roof lines.

FEATURES & BENEFITS

- Fast, simple installation
- Lower failure risk than module-level optimizers
- 2017/2020 NEC rapid shutdown compliant with SnapRS™
- Quick connections with MC4 connectors
- Exports up to 2500W
- Compatible with PWRcell™ Inverters
- Cost-effective solution for high-performance PV
- Ground-fault protection

SINGLE-STRING PV ARRAY WITH SnapRS DEVICES

Where PV module-level rapid shutdown is required (NEC 690.12), a SnapRS device (RS) is installed to negative (-) lead of each PV module.

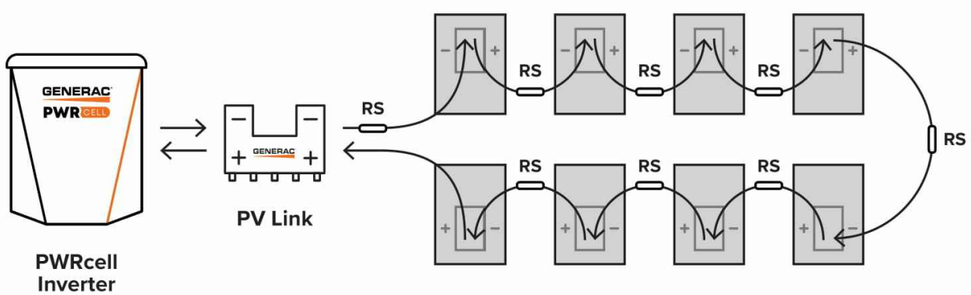

Diagram is applicable for most 60 cell PV modules. Modules with higher cell count may require a different arrangement. Contact Generac for more details.

Specifications

PV Link™ (APKE00010)	
RATED POWER*:	2500W
PEAK EFFICIENCY:	99%
MPPT VOLTAGE RANGE:	60-360 VMP
MAX INPUT VOLTAGE:	420 VOC; max when cold
MAX OUTPUT:	420 VOC
NOMINAL OUTPUT (REbus™):	380 VDC
MAX OUTPUT CURRENT (CONTINUOUS):	8 A
MAX OUTPUT CURRENT (FAULT):	10 A
MAX INPUT CURRENT (CONTINUOUS):	13 A @ 50°C, 10 A @ 70°C
MAX INPUT SHORT CIRCUIT CURRENT (ISC):	18 A
STANDBY POWER:	< 1 W
PROTECTIONS:	Ground-fault, Arc-fault (Arc-fault Type 1 AFCI, Integrated), PVRSE
MAX OPERATING TEMP: FAHRENHEIT (CELSIUS)	158 °F (70 °C)
SYSTEM MONITORING:	PWRview™ Web Portal and Mobile App
ENCLOSURE:	Type 3R
WEIGHT - LB (KG):	7.3 lb (3.3 kg)
DIMENSIONS, L x W x H - IN (MM):	15.4" x 2" x 9.6" (391.2 x 50.8 x 243.8)
COMPLIANCE:	UL 1741, CSA 22.2
WARRANTY:	25 Years

**PV Link can tolerate higher than rated power at its input if Max Input Voltage and Short Circuit Current specifications are not exceeded*

Generac Power Systems, Inc.
S45 W29290 Hwy. 59, Waukesha, WI 53189
www.Generac.com | 888-GENERAC (436-3722)

A0000528162 REV C

©2020 Generac Power Systems. All rights reserved.
Specifications are subject to change without notice.

GENERAC®

POWERHOME
POWER HOME SOLAR, LLC
"POWER YOUR FUTURE"
919 N. MAIN ST.
MOORESVILLE, NC 28115
Phone: 704-800-6591 (OFFICE)
Email: info@powerhome.com
Web: www.powerhome.com

REVISIONS

DESCRIPTION	DATE	REV

Signature with Seal

DATE: 1/25/2021

PROJECT NAME & ADDRESS

LAURIE M VANCE RESIDENCE
939 LARCHLEA DR.,
BIRMINGHAM, MI 48009

SHEET NAME
EQUIPMENT SPECIFICATION

SHEET SIZE
ANSI B
11" X 17"

SHEET NUMBER
PV-10

QRail™— Fully Integrated Mounting and Racking System

The QRail Series is a strong and versatile solar array mounting system that provides unrivaled benefits to solar designers and installers. Combined with Quick Mount PV's industry-leading waterproof mounts, QRail offers a complete racking solution for mounting solar modules on any roof.

Easily design array configurations with the QDesign software application. Generate complete engineering reports and calculate a precise bill of materials for all the mounting, racking and accessories needed for a complete solar array.

Comprehensive, One-Source Solution

QRail, together with Quick Mount PV's waterproof mounting products, provides the benefit of a single-sourced, seamlessly integrated rooftop installation that works with all roof types — composition/asphalt shingles, flat or curved tile, metal shingle, shake, slate and low slope roofs. The QRail system also works with any roof attachment system for maximum flexibility.

Superior Strength and Versatility

QRail is engineered for optimal structural performance. The system is certified to UL 2703, fully code compliant and backed by a 25-year warranty. QRail is available in Light, Standard and Heavy versions to match all geographic locations. QRail is compatible with virtually all modules and works on a wide range of pitched roof surfaces. Modules can be mounted in portrait or landscape orientation in standard or shared-rail configurations.

QRails come in two lengths — 168 inches (14 ft) and 208 inches (17.3 ft) Mill and Black Finish

Fast, Simple Installation: It Just Clicks

QClick Technology™

The universal mid and end clamps use QClick technology to simply "click" into the rail channel and remain upright, ready to accept the module. The pre-assembled clamps fit virtually all module frames and require no extra hardware, eliminating pre-loading and reducing installation time.

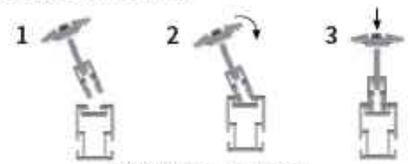

Installing is as easy as 1-2-3

Universal End Clamp

2 clamps for modules from 30-45mm or 38-50mm thick

Universal Bonded Mid Clamp

2 clamps for modules from 30-45mm or 38-50mm thick

QSplice™ Technology

QRail's innovative internal QSplice installs in seconds, requiring no tools or screws. Simply insert QSplice into the rail and slide the other rail on to create a fully structural, bonded splice. An external splice is also available.

Installs in seconds — no tools or hardware required

Fully Integrated Electrical Bonding

The QRail system provides an integrated electrical bonding path, ensuring that all exposed metal parts and the solar module frames are electrically connected. All electrical bonds are created when the components are installed and tightened down.

POWERHOME
POWER HOME SOLAR, LLC
"POWER YOUR FUTURE"
919 N. MAIN ST.
MOORESVILLE, NC 28115
Phone: 704-800-6591 (OFFICE)
Email: info@powerhome.com
Web: www.powerhome.com

REVISIONS

DESCRIPTION	DATE	REV

Signature with Seal

DATE: 1/25/2021

PROJECT NAME & ADDRESS

LAURIE M VANCE RESIDENCE
939 LARCHLEA DR.,
BIRMINGHAM, MI 48009

SHEET NAME
EQUIPMENT SPECIFICATION

SHEET SIZE
ANSI B
11" X 17"

SHEET NUMBER
PV-11

QRail™ Configurations

Item Code	Part Number	Description	Finish
QMR-RL14 A 60	800	QRail Light, 14 ft., 60 Pack	Mill
QMR-RL17.3 A 60	801	QRail Light, 17.3 ft, 60 Pack	Mill
QMR-RL14 B 60	805	QRail Light, 14 ft., 60 Pack	Black
QMR-RL17.3 B 60	806	QRail Light, 17.3 ft, 60 Pack	Black
QMR-RS14 A 60	810	QRail Standard, 14 ft., 60 Pack	Mill
QMR-RS17.3 A 60	811	QRail Standard, 17.3 ft, 60 Pack	Mill
QMR-RS14 B 60	815	QRail Standard, 14 ft., 60 Pack	Black
QMR-RS17.3 B 60	816	QRail Standard, 17.3 ft, 60 Pack	Black
QMR-RH14 A 60	820	QRail Heavy, 14 ft., 60 Pack	Mill
QMR-RH17.3 A 60	821	QRail Heavy, 17.3 ft, 60 Pack	Mill
QMR-RH14 B 60	825	QRail Heavy, 14 ft, 60 Pack	Black
QMR-RH17.3 B 60	826	QRail Heavy, 17.3 ft, 60 Pack	Black

QSplice™ Internal Structural Splice

Item Code	Part Number	Description	Finish
QMR-ISL A 15	830	QSplice Internal, Light, 15 Pack	Mill
QMR-ISS A 15	831	QSplice Internal, Standard, 15 Pack	Mill
QMR-ISH A 15	832	QSplice Internal, Heavy, 15 Pack	Mill

QSplice™ External Structural Splice

Item Code	Part Number	Description	Finish
QMR-ESS A 15	834	QSplice External, Standard, 15 Pack	Mill
QMR-ESH A 15	835	QSplice External, Heavy, 15 Pack	Mill

POWERHOME
POWER HOME SOLAR, LLC
"POWER YOUR FUTURE"
919 N. MAIN ST.
MOORESVILLE, NC 28115
Phone: 704-800-6591 (OFFICE)
Email: info@powerhome.com
Web: www.powerhome.com

REVISIONS

DESCRIPTION	DATE	REV

Signature with Seal

DATE: 1/25/2021

PROJECT NAME & ADDRESS

LAURIE M VANCE RESIDENCE
939 LARCHLEA DR.,
BIRMINGHAM, MI 48009

SHEET NAME
EQUIPMENT SPECIFICATION

SHEET SIZE
ANSI B
11" X 17"

SHEET NUMBER
PV-11A

Universal End Clamp with QClick™ Technology

Black *Mill*

Item Code	Part Number	Description	Finish
QMR-UEC3045 A 20	860	Universal End Clamp, 30-45mm, 20 Pack	Mill
QMR-UEC3850 A 20	861	Universal End Clamp, 38-50mm, 20 Pack	Mill
QMR-UEC3045 B 20	865	Universal End Clamp, 30-45mm, 20 Pack	Black
QMR-UEC3850 B 20	866	Universal End Clamp, 38-50mm, 20 Pack	Black
QMR-UEC3045BP A 20	862	Universal End Clamp, 30-45mm, w/ Bonding, 20 Pack	Mill
QMR-UEC3850BP A 20	863	Universal End Clamp, 38-50mm, w/ Bonding, 20 Pack	Mill
QMR-UEC3045BP B 20	867	Universal End Clamp, 30-45mm, w/ Bonding, 20 Pack	Black
QMR-UEC3850BP B 20	868	Universal End Clamp, 38-50mm, w/ Bonding, 20 Pack	Black

Mid Clamp with QClick™ Technology

Black *Mill*

Item Code	Part Number	Description	Finish
QMR-UMC3045BP 1.2 A 20	872	Universal Mid Clamp, 30-45mm, w/ Bonding, 20 Pack	Mill
QMR-UMC3850BP 1.2 A 20	873	Universal Mid Clamp, 38-50mm, w/ Bonding, 20 Pack	Mill
QMR-UMC3045BP 1.2 B 20	877	Universal Mid Clamp, 30-45mm, w/ Bonding, 20 Pack	Black
QMR-UMC3850BP 1.2 B 20	878	Universal Mid Clamp, 38-50mm, w/ Bonding, 20 Pack	Black

Single-Slot L-Foot

Item Code	Part Number	Description	Finish
QMC-LF A 12	692	Single-slot L-foot, 12 Pack	Mill
QMC-LF B 12	693	Single-slot L-foot, 12 Pack	Black

End Caps

Heavy *Standard* *Light*

Item Code	Part Number	Description	Finish
QMR-CPL B 50	885	End Cap Light, 50 Pack	Black
QMR-CPS B 50	886	End Cap Standard, 50 Pack	Black
QMR-CPH B 50	887	End Cap Heavy, 50 Pack	Black

POWERHOME
POWER HOME SOLAR, LLC
"POWER YOUR FUTURE"
919 N. MAIN ST.
MOORESVILLE, NC 28115
Phone: 704-800-6591 (OFFICE)
Email: info@powerhome.com
Web: www.powerhome.com

REVISIONS

DESCRIPTION	DATE	REV

Signature with Seal

DATE: 1/25/2021

PROJECT NAME & ADDRESS

LAURIE M VANCE RESIDENCE
939 LARCHLEA DR.,
BIRMINGHAM, MI 48009

SHEET NAME
EQUIPMENT SPECIFICATION

SHEET SIZE
ANSI B
11" X 17"

SHEET NUMBER
PV-11B

T-Bolt

Item Code	Part Number	Description	Finish
QMR-TB A 300	880	T-Bolt w/ Nut, 300 Pack	stainless steel

Wire Clip

Works with both PV and Trunk Cabling

Item Code	Part Number	Description	Finish
QMR-WCA 300	892	Trunk/PV Cable, 300 Pack	stainless steel

Grounding Lug

Item Code	Part Number	Description	Finish
QMR-GL A 50	890	WEEB Lug w/ T-Bolt, 50 Pack	n/a

WEEB BMC

Item Code	Part Number	Description	Finish
QMR-ECW A 50	891	WEEB BMC, 50 Pack	stainless steel

POWERHOME
POWER HOME SOLAR, LLC
"POWER YOUR FUTURE"
919 N. MAIN ST.
MOORESVILLE, NC 28115
Phone: 704-800-6591 (OFFICE)
Email: info@powerhome.com
Web: www.powerhome.com

REVISIONS

DESCRIPTION	DATE	REV

Signature with Seal

DATE: 1/25/2021

PROJECT NAME & ADDRESS

LAURIE M VANCE RESIDENCE
939 LARCHLEA DR.,
BIRMINGHAM, MI 48009

SHEET NAME
EQUIPMENT SPECIFICATION

SHEET SIZE
ANSI B
11" X 17"

SHEET NUMBER
PV-11C

L-Mount | QMLM / QMLM-ST

Elevated Water Seal Technology®

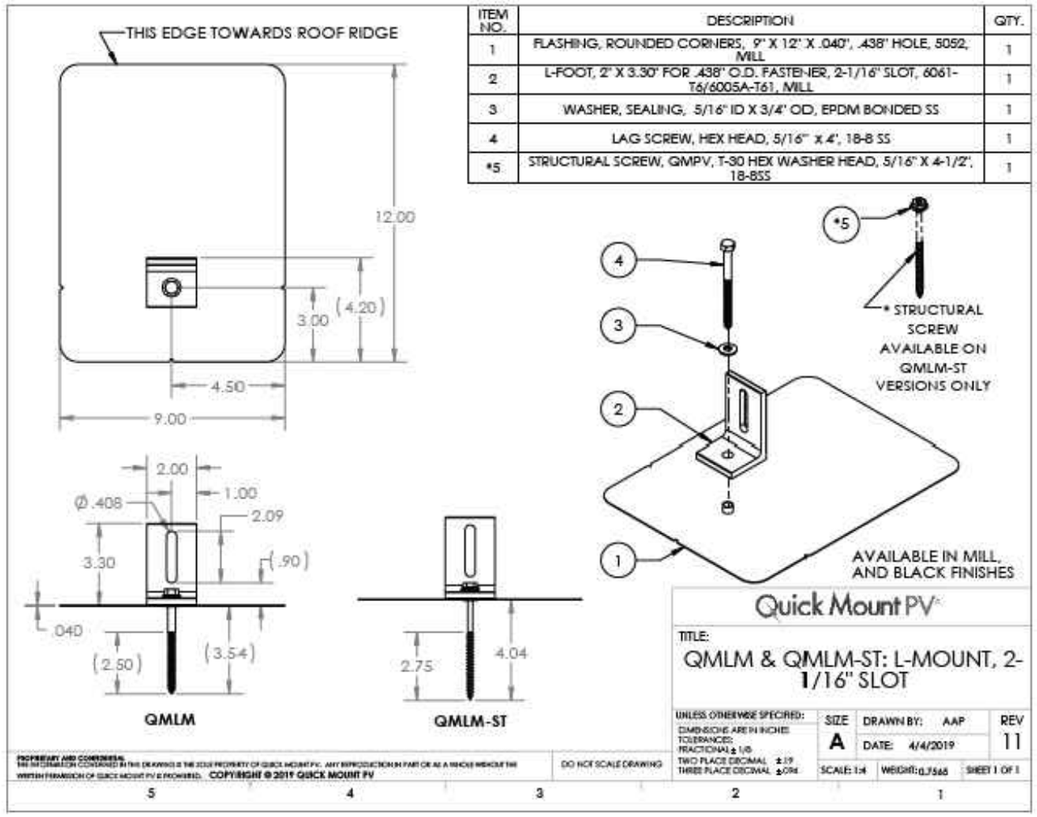

ITEM NO.	DESCRIPTION	QTY.
1	FLASHING, ROUNDED CORNERS, 9" X 12" X .040", .438" HOLE, 5052, MILL	1
2	L-FOOT, 2" X 3.30" FOR .438" O.D. FASTENER, 2-1/16" SLOT, 6061-T6/6005A-T61, MILL	1
3	WASHER, SEALING, 5/16" ID X 3/4" OD, EPDM BONDED SS	1
4	LAG SCREW, HEX HEAD, 5/16" x 4", 18-8 SS	1
*5	STRUCTURAL SCREW, QMPV, T-30 HEX WASHER HEAD, 5/16" X 4-1/2", 18-8SS	1

Quick Mount PV
RESPECT THE ROOF

L-Mount Installation Instructions

Installation Tools Required: tape measure, roofing bar, chalk line, stud finder, caulking gun, sealant compatible with roofing materials, drill with 7/32" or 1/8" bit, drill or impact gun with 1/2" socket.

WARNING: Quick Mount PV products are NOT designed for and should NOT be used to anchor fall protection equipment.

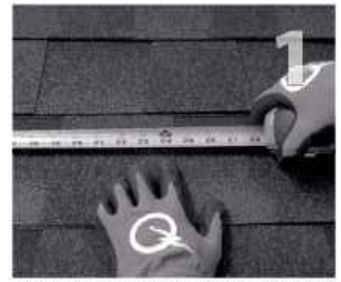

Locate, choose, and mark centers of rafters to be mounted. Select the courses of shingles where mounts will be placed.

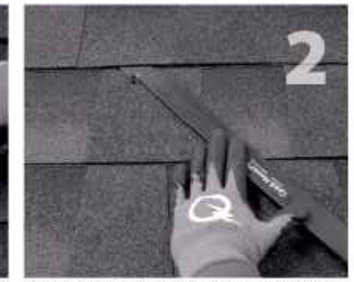

Carefully lift composition roof shingle with roofing bar, just above placement of mount. Remove nails as required and backfill holes with aproved sealant. See "Proper Flashing Placement" on next page.

Insert flashing between 1st and 2nd course. Slide up so top edge of flashing is at least ¾" higher than the butt-edge of the 3rd course and lower flashing edge is above the butt-edge of 1st course. Mark center for drilling.

If attaching with lag bolt use a 7/32" bit (Lag). Use a ⅛" bit (ST) for attaching with the structural screw. Drill pilot hole into roof and rafter, taking care to drill square to the roof. Do not use mount as a drill guide. Drill a 2" deep hole into rafter.

Clean off any sawdust, and fill hole with sealant compatible with roofing materials.

Place L-foot onto elevated flute and rotate L-foot to desired orientation.

Prepare lag bolt or structural screw with sealing washer. Using a ½-inch socket on an impact gun, drive prepared lag bolt through L-foot until L-foot can no longer easily rotate. **DO NOT over-torque.** NOTE: Structural screw can be driven with T-30 hex head bit.

You are now ready for the rack of your choice. Follow all the directions of the rack manufacturer as well as the module manufacturer. NOTE: Make sure top of L-Foot makes solid contact with racking.

All roofing manufacturers' written instructions must also be followed by anyone modifying a roof system. Consult the roof manufacturer's specs and instructions prior to working on the roof.

BI 7.2.3-44

Apr-2019 Rev 6

POWERHOME
POWER HOME SOLAR, LLC
"POWER YOUR FUTURE"
919 N. MAIN ST.
MOORESVILLE, NC 28115
Phone: 704-800-6591 (OFFICE)
Email: info@powerhome.com
Web: www.powerhome.com

REVISIONS

DESCRIPTION	DATE	REV

Signature with Seal

DATE: 1/25/2021

PROJECT NAME & ADDRESS

LAURIE M VANCE RESIDENCE
939 LARCHLEA DR.,
BIRMINGHAM, MI 48009

SHEET NAME
EQUIPMENT SPECIFICATION

SHEET SIZE
ANSI B
11" X 17"

SHEET NUMBER
PV-12

E-Mount | QMSE

Elevated Water Seal Technology®

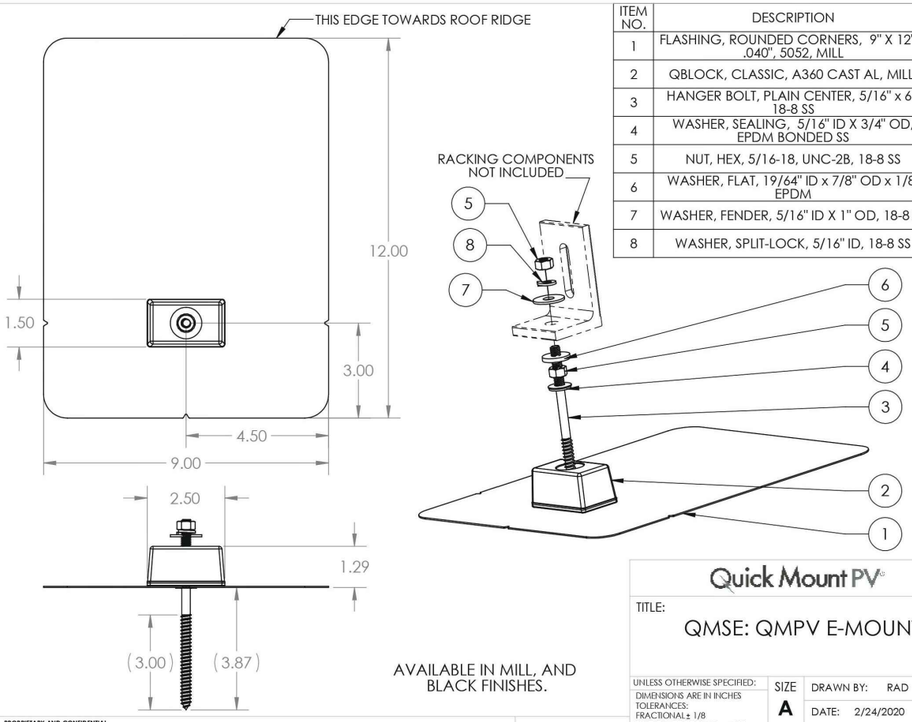

ITEM NO.	DESCRIPTION	QTY.
1	FLASHING, ROUNDED CORNERS, 9" X 12" X .040", 5052, MILL	1
2	QBLOCK, CLASSIC, A360 CAST AL, MILL	1
3	HANGER BOLT, PLAIN CENTER, 5/16" x 6", 18-8 SS	1
4	WASHER, SEALING, 5/16" ID X 3/4" OD, EPDM BONDED SS	1
5	NUT, HEX, 5/16-18, UNC-2B, 18-8 SS	2
6	WASHER, FLAT, 19/64" ID x 7/8" OD x 1/8" EPDM	1
7	WASHER, FENDER, 5/16" ID X 1" OD, 18-8 SS	1
8	WASHER, SPLIT-LOCK, 5/16" ID, 18-8 SS	1

Lag pull-out (withdrawal) capacities (lbs) in typical lumber:

	Lag Bolt Specifications		
	Specific Gravity	5/16" shaft per 3" thread depth	5/16" shaft per 1" thread depth
Douglas Fir, Larch	.50	798	266
Douglas Fir, South	.46	705	235
Engelmann Spruce, Lodgepole Pine (MSR 1650 f & higher)	.46	705	235
Hem, Fir	.43	636	212
Hem, Fir (North)	.46	705	235
Southern Pine	.55	921	307
Spruce, Pine, Fir	.42	615	205
Spruce, Pine, Fir (E of 2 million psi and higher grades of MSR and MEL)	.50	798	266

Sources: American Wood Council, NDS 2005, Table 11.2 A, 11.3.2 A

Notes:

1) Thread must be embedded in a rafter or other structural roof member.
2) See NDS Table 11.5.1C for required edge distances.

Quick Mount PV®
RESPECT THE ROOF

E-Mount Installation Instructions

Installation Tools Required: tape measure, roofing bar, chalk line, stud finder, caulking gun, sealant compatible with roofing materials, drill with 7/32" long-style bit, drill or impact gun with 1/2" deep socket.

WARNING: Quick Mount PV products are NOT designed for and should NOT be used to anchor fall protection equipment.

Locate, choose, and mark centers of rafters to be mounted. Select the courses of shingles where mounts will be placed.

Carefully lift composition roof shingle with roofing bar, just above placement of mount. Remove nails as required. See "Proper Flashing Placement" on next page.

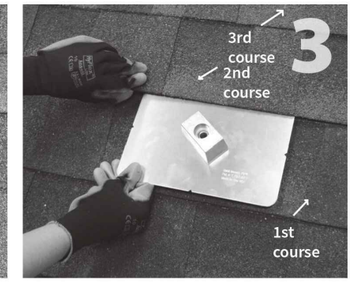

Insert flashing between 1st and 2nd course. Slide up so top edge of flashing is at least 3/4" higher than the butt-edge of the 3rd course and lower flashing edge is above the butt-edge of 1st course. Mark center for drilling.

Using drill with 7/32" bit, drill pilot hole into roof and rafter, taking care to drill square to the roof. Do not use mount as a drill guide. Drill should be 'long style bit', aka 'aircraft extension bit' to drill a 3" deep hole into rafter.

Clean off any sawdust, and fill hole with sealant compatible with roofing materials.

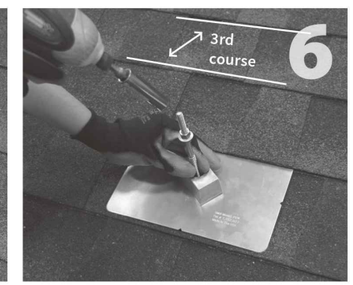

Slide flashing into position. Prepare hanger bolt with hex nut and sealing washer. Insert into hole and drive hanger bolt until QBlock stops rotating easily. **Do NOT over torque**.

Insert EPDM rubber washer over hanger bolt into block.

Using the rack kit hardware, secure the racking (L-foot) to the mount using torque specs from racking manufacturer. If racking manufacturer does not specify torque setting, tighten to 13 ft.-lbs.

You are now ready for the rack of your choice. Follow all the directions of the rack manufacturer as well as the module manufacturer.

All roofing manufacturers' written instructions must also be followed by anyone modifying a roof system. Consult the roof manufacturer's specs and instructions prior to touching the roof.

POWERHOME

POWER HOME SOLAR, LLC
"POWER YOUR FUTURE"
919 N. MAIN ST.
MOORESVILLE, NC 28115
Phone: 704-800-6591 (OFFICE)
Email: info@powerhome.com
Web: www.powerhome.com

REVISIONS

DESCRIPTION	DATE	REV

Signature with Seal

DATE: 1/25/2021

PROJECT NAME & ADDRESS

LAURIE M VANCE RESIDENCE
939 LARCHLEA DR.,
BIRMINGHAM, MI 48009

SHEET NAME
EQUIPMENT SPECIFICATION

SHEET SIZE
ANSI B
11" X 17"

SHEET NUMBER
PV-12A

PROJECT DESCRIPTION:

21x340 Q.PEAK DUO BLK-G6+ 340W (340W) MODULES
ROOF MOUNTED SOLAR PHOTOVOLTAIC MODULES
SYSTEM SIZE: 7.14 kW DC STC
SYSTEM SIZE: 6.09 kW AC

EQUIPMENT SUMMARY
21 Q.PEAK DUO BLK-G6+ 340W (340W) MODULES
21 ENPHASE IQ7PLUS-72-2-US MICRO INVERTERS

DESIGN CRITERIA	
WIND SPEED	115
EXPOSURE CATEGORY	B
RISK CATEGORY	II
MOUNTING METHOD	ROOF MOUNT
GROUND SNOW LOAD	25

CODE COMPLIANCE

ALL WORK SHALL COMPLY WITH ALL STATE AND LOCAL CODES, ORDINANCES AND ANY OTHER REGULATING AUTHORITIES WHICH HAVE AUTHORITY OVER ANY PORTION OF THE WORK

BUILDING CODE:
ALL WORK SHALL COMPLY WITH THE
2015 MI BUILDING CODE
2015 MI RESIDENTIAL CODE
2015 MI FIRE CODE TITLE 24 SUPPLEMENT
2015 MI ELECTRICAL CODE

ELECTRICAL CODE:
ALL ELECTRICAL WORK SHALL COMPLY WITH THE 2017 NATIONAL ELECTRIC CODE AS AMENDED BY THE MIGIHIAN ELECTRIC CODE.

GENERAL INSTALLATION NOTES

1. INSTALLER SHALL ASSUME FULL RESPONSIBILITY AND LIABILITY FOR COMPLIANCE WITH REGULATIONS PER FEDERAL OSHA AND LOCAL REGULATIONS PERTAINING TO WORK PRACTICES, PROTECTION OF WORKERS AND VISITORS TO THE SITE.
2. INSTALLER SHALL VERIFY ALL EXISTING CONDITIONS AND DIMENSIONS AT SITE BEFORE COMMENCING WORK.
3. CONTRACTOR SHALL FURNISH ALL MATERIAL EXCEPT AS SPECIFIED IN THE CONTRACT AND/OR THESE DRAWINGS.
4. ALL MATERIALS SHALL BE IN NEW AND UNUSED CONDITION.
5. MANUFACTURER'S MATERIAL EQUIPMENT, ETC. SHALL BE INSTALLED PER MANUFACTURER'S RECOMMENDATIONS AND INSTRUCTIONS.
6. THE INSTALLER SHALL BECOME FAMILIAR WITH ALL UTILITY AS-BUILT PLANS AND THE LOCATIONS OF ALL EXISTING UTILITIES, STRUCTURES, PAVEMENT OR IMPROVEMENTS.
7. CONTRACTOR SHALL VERIFY EXISTING CONDITIONS AND NOTIFY THE OWNER OF DISCREPANCIES REQUIRING FURTHER CLARI FICATION BEFORE PROCEEDING WITH THE WORKS.
8. INSTALL ALL ASPECTS OF THIS PROJECT IN ACCORDANCE WITH THE SPECIFICATIONS AND AS NOTED ON DRAWINGS ISSUED FOR CONSTRUCTION.
9. CONDUCTORS EXPOSED TO SUNLIGHT SHALL BE LISTED AS SUNLIGHT RESISTANT PER 310.0(D)
10. WORKING CLEARANCES AROUND THE EXISTING AND NEW ELECTRICAL EQUIPMENT WILL BE MAINTAINED IN ACCORDANCE WITH NEC 110.26
11. EXACT CONDUIT RUN LOCATIONS SUBJECT TO CHANGE
12. ROOF PENETRATIONS ARE SEALED.
13. INVERTER IS LISTED TO UL-1741 "UTILITY INTERACTIVE"
14. VISIBLE, LABELED, LOCKABLE DISCONNECT LOCATED LESS THAN 10' FROM UTILITY METER

RECEIVED
APR 05 2021
CITY OF BIRMINGHAM
COMMUNITY DEVELOPMENT DEPARTMENT

SHEET INDEX

PV-0	COVER SHEET
PV-1	PLOT PLAN WITH ROOF PLAN
PV-2	ROOF PLAN WITH MODULES
PV-2A	STRING LAYOUT
PV-3	ATTACHMENT DETAIL
PV-4	ELECTRICAL LINE DIAGRAM
PV-5	PLACARDS
PV-6+	EQUIPMENT SPECIFICATIONS

1 HOUSE PHOTO
PV-0 SCALE: NTS

2 VICINITY MAP
PV-0 SCALE: NTS

GREEN PANEL
4023 South Old US Highway 23 #115 Brighton, MI 48114

REVISIONS

DESCRIPTION	DATE	REV

Signature with Seal

CUSTOMER INFORMATION
RAMOS RESIDENCE
1047 PILGRIM AVENUE, BIRMINGHAM, MI 48009

SHEET NAME
COVER SHEET

SHEET SIZE
ANSI B
11" X 17"

SHEET NUMBER
PV-0

ROOF ACCESS POINT

ROOF ACCESS POINT SHALL NOT BE LOCATED IN AREAS THAT DO NOT REQUIRE THE PLACEMENT OF GROUND LADDERS OVER OPENINGS SUCH AS WINDOWS OR DOORS, AND LOCATED AT STRONG POINTS OF BUILDING CONSTRUCTION IN LOCATIONS WHERE THE ACCESS POINT DOES NOT CONFLICT WITH OVERHEAD OBSTRUCTIONS SUCH AS TREE LIMBS, WIRES OR SIGNS.

SYSTEM SUMMARY

21 Q.PEAK DUO BLK-G6+ 340W (340W) MODULES
21 ENPHASE IQ7PLUS-72-2-US MICROINVERTERS
SYSTEM SIZE: 7.14 KW DC STC

NOTE:
VISIBLE, LABELED, LOCKABLE DISCONNECT
LOCATED 5' FROM UTILITY METER

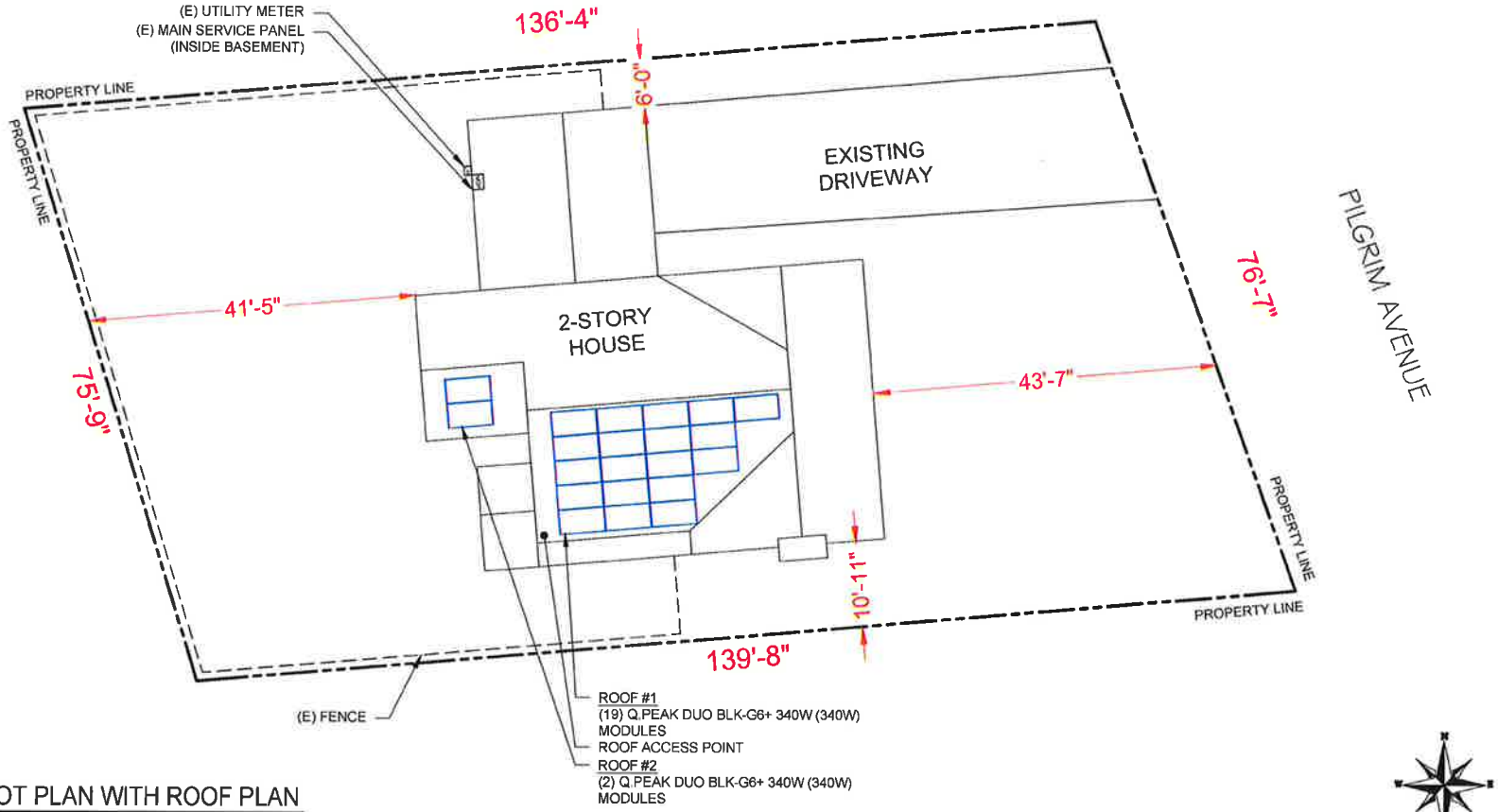

1 PLOT PLAN WITH ROOF PLAN
PV-1 SCALE: 1"=14'-0"

GREEN PANEL
4023 South Old US Highway 23 #115 Brighton, MI 48114

REVISIONS

DESCRIPTION	DATE	REV

Signature with Seal

CUSTOMER INFORMATION

RAMOS RESIDENCE
1047 PILGRIM AVENUE, BIRMINGHAM, MI 48009

SHEET NAME
PLOT PLAN WITH ROOF PLAN

SHEET SIZE
ANSI B
11" X 17"

SHEET NUMBER
PV-1

MODULE TYPE, DIMENSIONS & WEIGHT

NUMBER OF MODULES = 21 MODULES
MODULE TYPE = Q.PEAK DUO BLK-G6+ 340W (340W) MODULES
MODULE WEIGHT = 43.90 LBS / 19.90 KG.
MODULE DIMENSIONS = 68.50"x 40.60" = 19.31 SF
UNIT WEIGHT OF ARRAY = 2.27 PSF

SYSTEM SUMMARY
21 Q.PEAK DUO BLK-G6+ 340W (340W) MODULES
21 ENPHASE IQ7PLUS-72-2-US MICROINVERTERS
SYSTEM SIZE: 7.14 KW DC STC

NOTE:
VISIBLE, LABELED, LOCKABLE DISCONNECT
LOCATED 5' FROM UTILITY METER

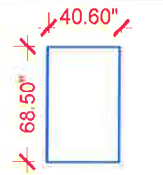

Q.PEAK DUO BLK-G6+
340W MODULES

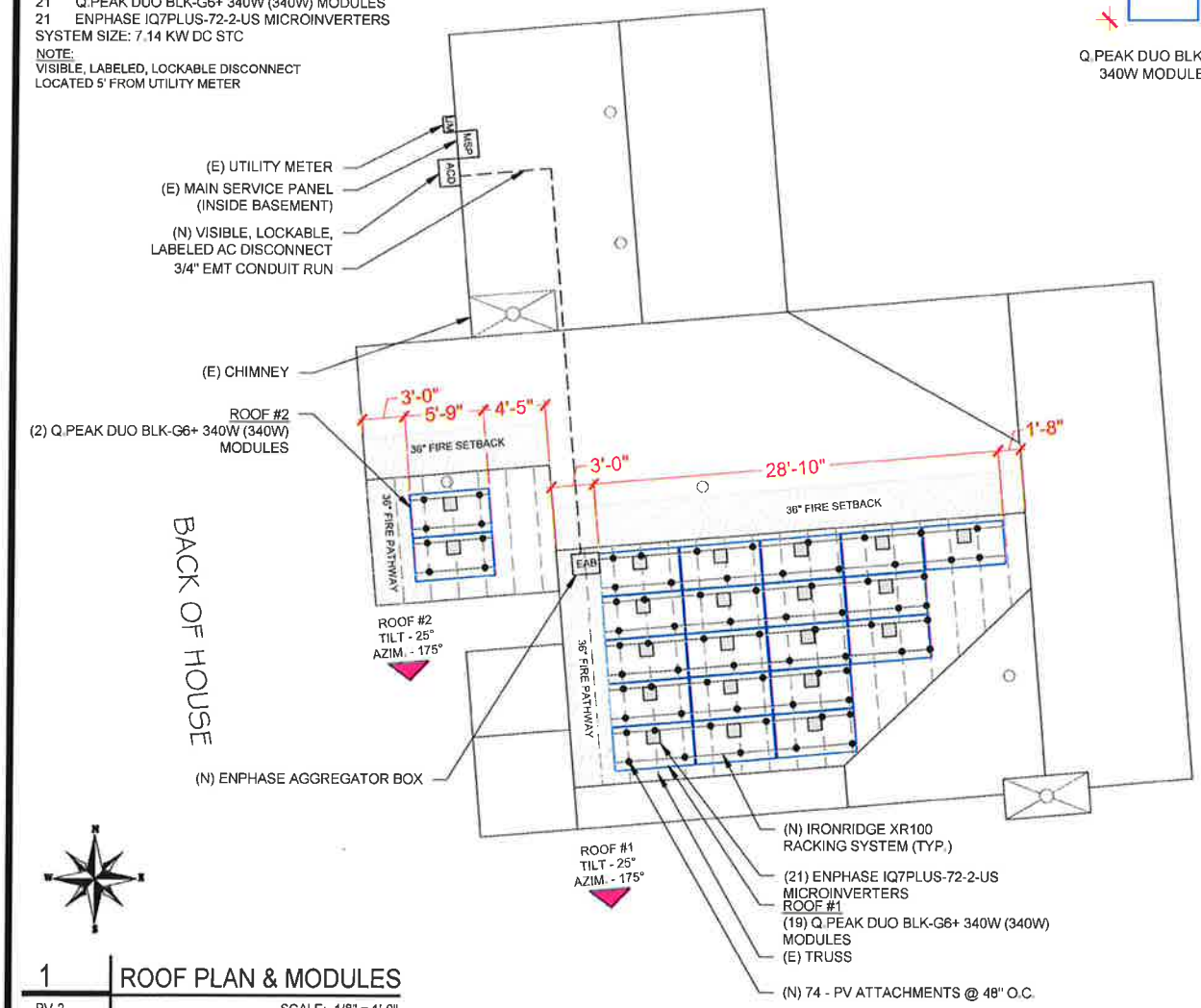

ARRAY AREA WITH MOUNTING ROOF AREA

ROOF	# OF MODULES	ARRAY AREA (Sq. Ft.)	MOUNTING ROOF AREA (Sq. Ft.)	ROOF AREA COVERED BY ARRAY (%)
#1	19	366.95	483.65	75.87
#1	2	38.63	117.67	32.83

ROOF DESCRIPTION

ROOF TYPE			COMP. SHINGLE	
ROOF	ROOF TILT	AZIMUTH	FRAMINGSIZE	FRAMING SPACING
#1	25°	175°	2"x4"	24" O.C.
#2	25°	175°	2"x4"	24" O.C.

RACKING MATERIAL LIST

RAIL:	16
END CLAMP:	28
MID CLAMP:	28
SPLICE KIT:	6
ATTACHMENT:	74

LEGEND

- MICRO-INVERTER
- UM - UTILITY METER
- EAB - ENPHASE AGGREGATOR BOX
- ACD - AC DISCONNECT
- MSP - MAIN SERVICE PANEL
- VENTS ,DISH (ROOF OBSTRUCTION)
- ROOF ATTACHMENT
- TRUSS
- RAIL
- CONDUIT

1 ROOF PLAN & MODULES
PV-2 SCALE: 1/8" = 1'-0"

GREEN PANEL
4023 South Old US Highway 23 #115 Brighton, MI 48114

REVISIONS

DESCRIPTION	DATE	REV

Signature with Seal

CUSTOMER INFORMATION
RAMOS RESIDENCE
1047 PILGRIM AVENUE,
BIRMINGHAM, MI 48009

SHEET NAME
ROOF PLAN WITH MODULES

SHEET SIZE
ANSI B
11" X 17"

SHEET NUMBER
PV-2

BILL OF MATERIALS

EQUIPMENT	QTY	DESCRIPTION
SOLAR PV MODULE	21	Q.PEAK DUO BLK-G6+ 340W (340W) MODULES
MICRO INVERTER	21	ENPHASE IQ7PLUS-72-2-US MICRO INVERTERS
COMBINER BOX	1	ENPHASE AGGREGATOR BOX
AC DISCONNECT	1	60A NON-FUSED AC DISCONNECT, 240V
ATTACHMENT	74	IRONRIDGE FLASSHFOOT
RAILS	10	IRONRIDGE XR100 RAIL-204" SECTION
	6	IRONRIDGE XR100 RAIL-168" SECTION
	0	IRONRIDGE XR100 RAIL-132" SECTION
RAIL SPLICE	6	SPLICE KIT
MID CLAMPS	28	MID CLAMPS / UFO
END CLAMPS	28	END CLAMPS / STOPPER SLEEVE
GROUNDING LUG	7	GROUNDING LUG

DISCLAIMER: MATERIALS REQUIRED LIST FOR CONCEPTUAL USE ONLY THE INTENT IS TO AID CONTRACTOR FOR ORDERING REQUIRED MATERIALS FOR THE PROJECT. CONTRACTOR RESPONSIBLE TO VERIFY PRIOR TO SOLAR EQUIPMENT ORDERING

SYSTEM SUMMARY
21 Q.PEAK DUO BLK-G6+ 340W (340W) MODULES
21 ENPHASE IQ7PLUS-72-2-US MICROINVERTERS
SYSTEM SIZE: 7.14 KW DC STC
NOTE:
VISIBLE, LABELED, LOCKABLE DISCONNECT
LOCATED 5' FROM UTILITY METER

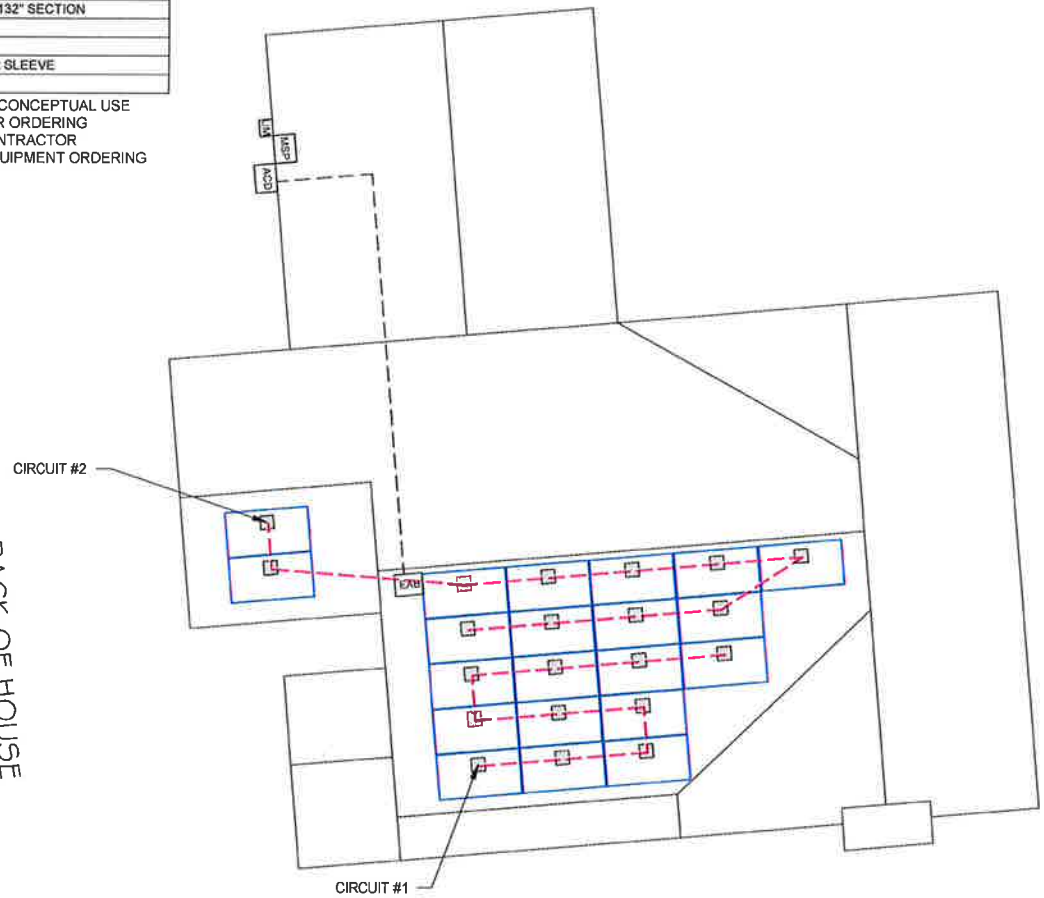

1 CIRCUIT LAYOUT
PV-2A SCALE: 1/8" = 1'-0"

GREEN PANEL
4023 South Old US Highway 23 #115 Brighton, MI 48114

REVISIONS

DESCRIPTION	DATE	REV

Signature with Seal

CUSTOMER INFORMATION
RAMOS RESIDENCE
1047 PILGRIM AVENUE, BIRMINGHAM, MI 48009

SHEET NAME
CIRCUIT LAYOUT

SHEET SIZE
ANSI B
11" X 17"

SHEET NUMBER
PV-2A

SYSTEM SUMMARY
21 Q PEAK DUO BLK-G6+ 340W (340W) MODULES
21 ENPHASE IQ7PLUS-72-2-US MICROINVERTERS
SYSTEM SIZE: 7.14 KW DC STC
NOTE:
VISIBLE, LABELED, LOCKABLE DISCONNECT
LOCATED 5' FROM UTILITY METER

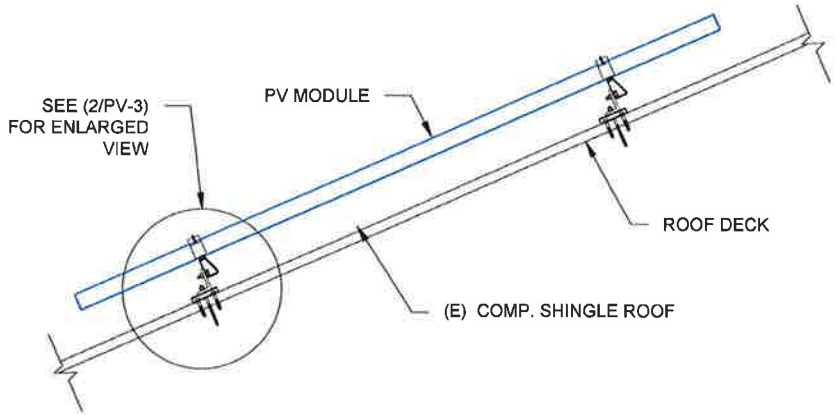

1 PV-3 ATTACHMENT DETAIL (SIDE VIEW)
SCALE: NTS

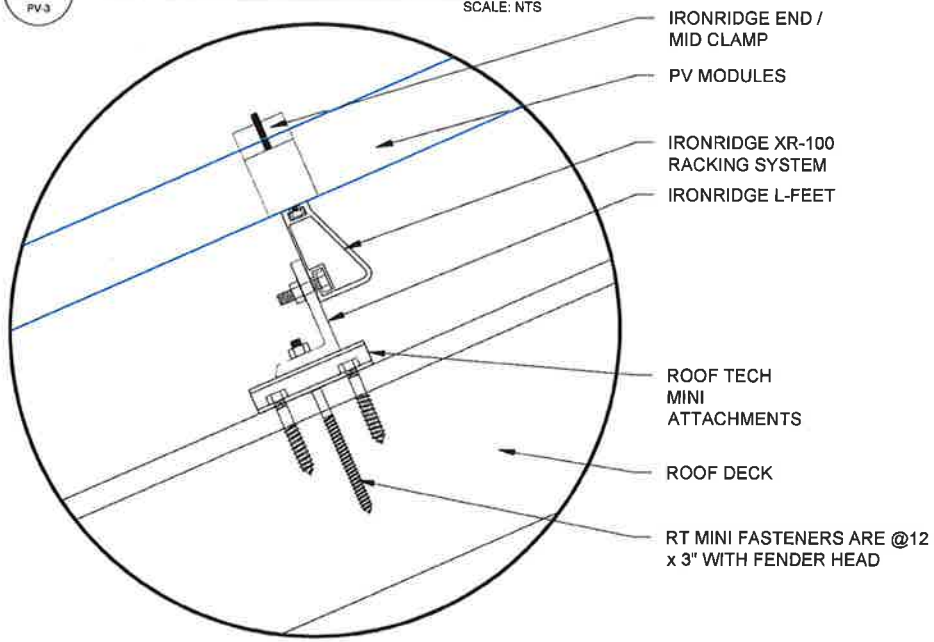

2 PV-3 ATTACHMENT DETAIL ENLARGED VIEW
SCALE: NTS

GREEN PANEL
4023 South Old US Highway
23 #115 Brighton, MI 48114

REVISIONS

DESCRIPTION	DATE	REV

Signature with Seal

CUSTOMER INFORMATION
RAMOS RESIDENCE
1047 PILGRIM AVENUE,
BIRMINGHAM, MI 48009

SHEET NAME
ATTACHMENT DETAIL

SHEET SIZE
ANSI B
11" X 17"

SHEET NUMBER
PV-3

SOLAR MODULE SPECIFICATIONS	
MANUFACTURER / MODEL #	Q.PEAK DUO BLK-G6+ 340W
VMP	33.94V
IMP	10.02A
VOC	40.66V
ISC	10.52A
MODULE DIMENSION	68.50"L x 40.60"W x 1.26"D (In Inch)

INVERTER SPECIFICATIONS	
MANUFACTURER	ENPHASE
MODEL #	IQ7PLUS-72-2-US
NOMINAL AC POWER	290W
NOMINAL OUTPUT VOLTAGE	240V
NOMINAL OUTPUT CURRENT	1.21A

(21) Q.PEAK DUO BLK-G6+ 340W (340W) MODULES
(21) ENPHASE IQ7PLUS-72-2-US MICRO-INVERTERS
(01) CIRCUIT OF 11 MODULES WITH MICRO-INVERTERS
(01) CIRCUIT OF 10 MODULES WITH MICRO-INVERTERS
CONNECTED IN SERIES PER CIRCUIT
SYSTEM SIZE: 7.14 KW DC STC
SYSTEM SIZE: 6.09 kW AC

NOTE:
VISIBLE, LABELED, LOCKABLE DISCONNECT
LOCATED 5' FROM UTILITY METER

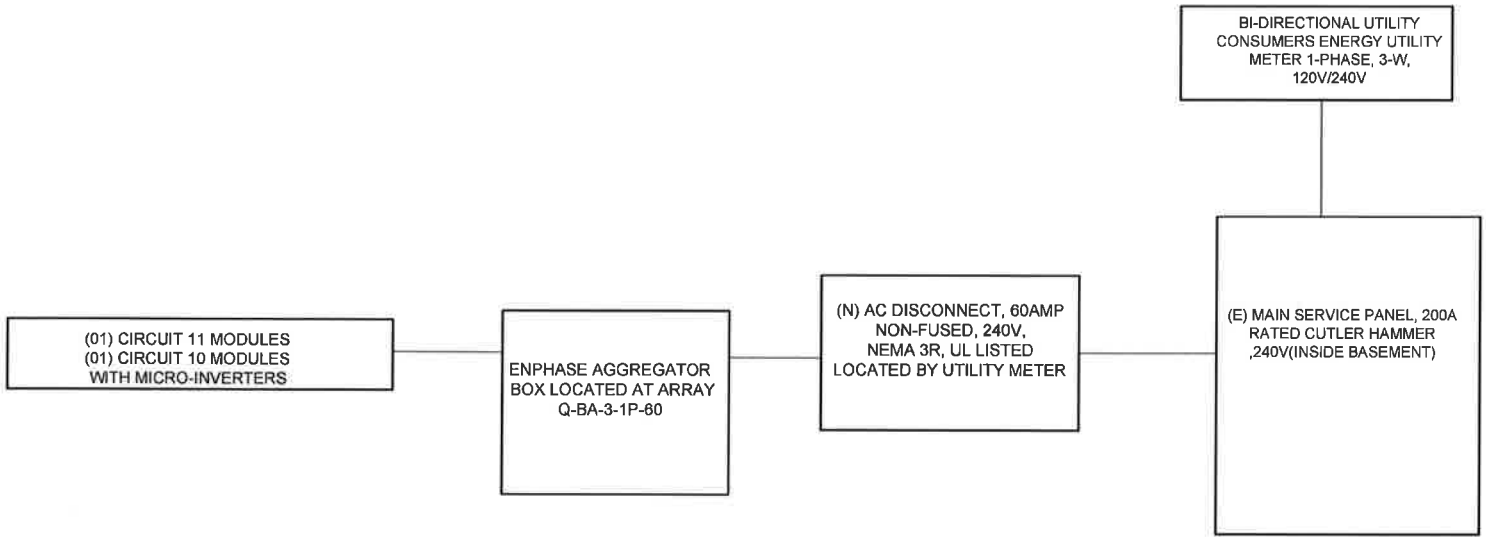

GREEN PANEL
4023 South Old US Highway 23 #115 Brighton, MI 48114

REVISIONS

DESCRIPTION	DATE	REV

Signature with Seal

CUSTOMER INFORMATION

RAMOS RESIDENCE
1047 PILGRIM AVENUE,
BIRMINGHAM, MI 48009

SHEET NAME
ELECTRICAL LINE DIAGRAM

SHEET SIZE
ANSI B
11" X 17"

SHEET NUMBER
PV-4

SIGNAGE REQUIREMENTS:
- RED BACKGROUND
- WHITE LETTERING
- MINIMUM 3/8" LETTER HEIGHT
- ALL CAPITAL LETTERS
- ARIAL OR SIMILAR FONT
- REFLECTIVE WEATHER RESISTANT MATERIAL, UL969

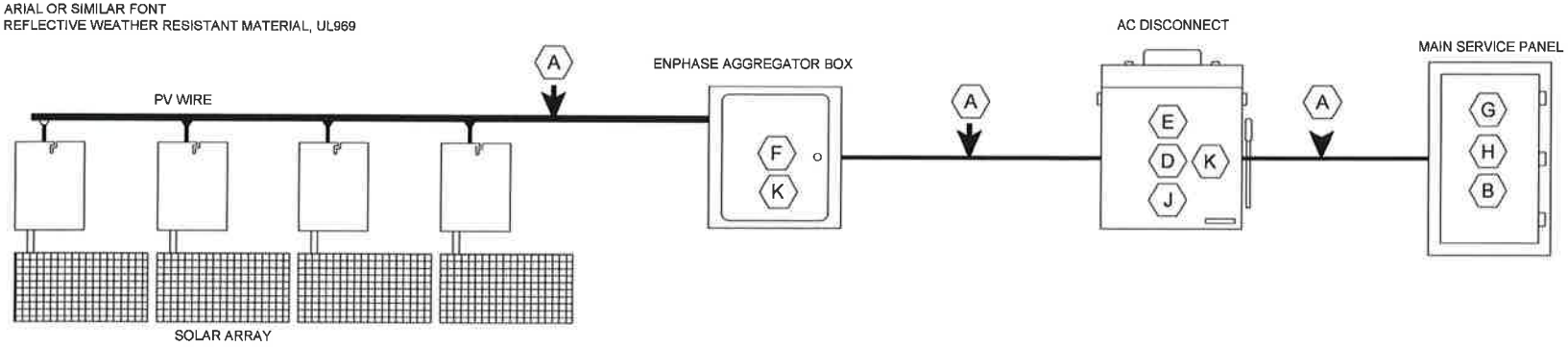

#1 5.75" x 1.25", RED AND WHITE LETTERS, REFLECTIVE

WARNING: PHOTOVOLTAIC POWER SOURCE (A)

Per NEC 690.31(G) (3)(4) Place on all source markings. Place on Conduit every 10 ft (IFC 605.11.1.1 and IFC 605.11.1.2)

#2 4" x 2", RED AND WHITE LETTERS

WARNING (B)

INVERTER OUTPUT CONNECTION DO NOT RELOCATE THIS OVERCURRENT DEVICE.

PER NEC 705.12(B)(2)(3)(b)

#3 4" x 2", RED AND WHITE LETTERS

WARNING (C)

INTERCONNECTED ELECTRIC POWER PRODUCTION SOURCES

PER NEC 705.12(C)

#4 5.5" x 1.75", RED AND WHITE LETTERS

PHOTOVOLTAIC SYSTEM EQUIPPED WITH RAPID SHUTDOWN (D)

PER NEC 690.56(C)

#5 INV-1 3.75" x 1", RED AND WHITE LETTERS

PHOTOVOLTAIC AC DISCONNECT (E)

MAX AC OPERATING CURRENT	25.41A
MAX OPERATING VOLTAGE	240V

PER NEC 690.54

#6 4" x 3", RED AND WHITE LETTERS

WARNING (F)

THIS EQUIPMENT FED BY MULTIPLE SOURCES. TOTAL RATING OF ALL OVERCURRENT DEVICES, EXCLUDING MAIN SUPPLY OVERCURRENT DEVICE, SHALL NOT EXCEED AMPACITY OF BUSBAR

PER NEC 705.12(B)(2)(3)(c)

#7 3.5" x 1.5", RED AND WHITE LETTERS

WARNING (H)

ELECTRICAL SHOCK HAZARD

DO NOT TOUCH TERMINALS. TERMINALS ON BOTH THE LINE AND LOAD SIDES MAY BE ENERGIZED IN THE OPEN POSITION

PER NEC 690.13(B)

#8 5.75" x 1.25", RED AND WHITE LETTERS, REFLECTIVE

PHOTOVOLTAIC AC DISCONNECT (J)

PER NEC NEC 690.13(B)

#9 5.75" x 1.25", RED AND WHITE LETTERS, REFLECTIVE

SOLAR PHOTOVOLTAIC SYSTEMS (K)

PER NEC NEC 690

CAUTION

POWER TO THIS BUILDING IS ALSO SUPPLIED FROM THE FOLLOWING SOURCES WITH DISCONNECTS LOCATED AS SHOWN

AT: ☒ MAIN SERVICE PANEL & UTILITY METER
AC DISCONNECT

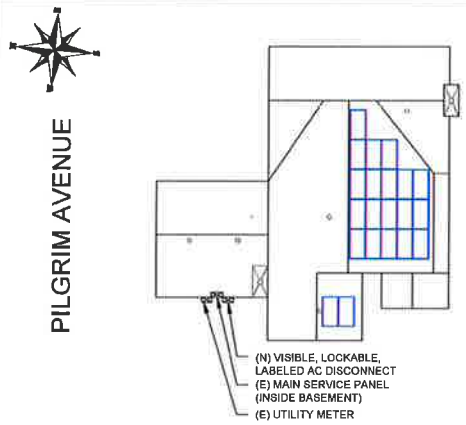

1047 PILGRIM AVENUE, BIRMINGHAM, MI 48009 USA

GREEN PANEL
4023 South Old US Highway 23 #115 Brighton, MI 48114

REVISIONS

DESCRIPTION	DATE	REV

Signature with Seal

CUSTOMER INFORMATION

RAMOS RESIDENCE
1047 PILGRIM AVENUE, BIRMINGHAM, MI 48009

SHEET NAME
PLACARDS

SHEET SIZE
ANSI B
11" X 17"

SHEET NUMBER
PV-5

powered by Q.ANTUM DUO

Q.PEAK DUO BLK-G6+

330-345

ENDURING HIGH PERFORMANCE

Q ANTUM TECHNOLOGY: LOW LEVELIZED COST OF ELECTRICITY

Higher yield per surface area, lower BOS costs, higher power classes, and an efficiency rate of up to 19.5%.

INNOVATIVE ALL-WEATHER TECHNOLOGY

Optimal yields, whatever the weather with excellent low-light and temperature behavior.

ENDURING HIGH PERFORMANCE

Long-term yield security with Anti LID and Anti PID Technology[1], Hot-Spot Protect and Traceable Quality Tra.Q™.

EXTREME WEATHER RATING

High-tech aluminum alloy frame, certified for high snow (5400Pa) and wind loads (4000Pa).

A RELIABLE INVESTMENT

Inclusive 25-year product warranty and 25-year linear performance warranty[2].

STATE OF THE ART MODULE TECHNOLOGY

Q ANTUM DUO combines cutting edge cell separation and innovative wiring with Q.ANTUM Technology.

[1] APT test conditions according to IEC/TS 62804-1:2015, method B (-1500V, 168h)
[2] See data sheet on rear for further information

THE IDEAL SOLUTION FOR:

Rooftop arrays on residential buildings

Engineered in Germany

Q CELLS

MECHANICAL SPECIFICATION

Format	1730mm × 1045mm × 32mm (including frame)
Weight	19.9kg
Front Cover	3.2 mm thermally pre-stressed glass with anti-reflection technology
Back Cover	Composite film
Frame	Black anodized aluminium
Cell	6 × 20 monocrystalline Q ANTUM solar half cells
Junction box	53-101 mm × 32-60 mm × 15-18 mm Protection class IP67, with bypass diodes
Cable	4 mm² Solar cable; (+) ≥1150 mm, (-) ≥1150 mm
Connector	Staubli MC4; Hanwha Q CELLS HiCON, IP68

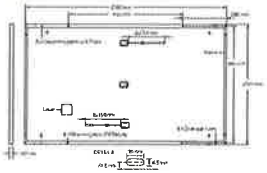

ELECTRICAL CHARACTERISTICS

POWER CLASS			330	335	340	345
MINIMUM PERFORMANCE AT STANDARD TEST CONDITIONS, STC (POWER TOLERANCE +5W / -0W)						
Power at MPP	P_{MPP}	[W]	330	335	340	345
Short Circuit Current	I_{SC}	[A]	10.41	10.47	10.62	10.68
Open Circuit Voltage	V_{OC}	[V]	40.15	40.41	40.66	40.92
Current at MPP	I_{MPP}	[A]	9.81	9.87	10.02	10.07
Voltage at MPP	V_{MPP}	[V]	33.79	33.92	33.94	34.25
Efficiency	η	[%]	≥18.4	≥18.7	≥19.0	≥19.3
MINIMUM PERFORMANCE AT NORMAL OPERATING CONDITIONS, NMOT						
Power at MPP	P_{MPP}	[W]	247.0	250.7	254.5	258.2
Short Circuit Current	I_{SC}	[A]	8.38	8.43	8.48	8.52
Open Circuit Voltage	V_{OC}	[V]	37.86	38.10	38.34	38.59
Current at MPP	I_{MPP}	[A]	7.81	7.84	7.89	7.91
Voltage at MPP	V_{MPP}	[V]	31.68	31.97	32.27	32.57

*Measuring tolerances P_{MPP} ± 3%; I_{SC}; V_{OC} ± 5% at STC: 1000 W/m², 25 ± 2°C, AM 1.5 according to IEC 60904-3 • 800 W/m² NMOT, spectrum AM 1.5

Q CELLS PERFORMANCE WARRANTY

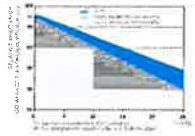

At least 98% of nominal power during first year. Thereafter max. 0.5% degradation per year. At least 93.5% of nominal power up to 10 years. At least 85% of nominal power up to 25 years.

All data within this data sheet are subject to change without further notice.

PERFORMANCE AT LOW IRRADIANCE

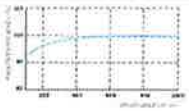

Typical module performance under low irradiance conditions in comparison to STC conditions (25°C, 1000 W/m²).

TEMPERATURE COEFFICIENTS

Temperature Coefficient of I_{SC}	α	[%/K]	+0.04	Temperature Coefficient of V_{OC}	β	[%/K]	-0.27
Temperature Coefficient of P_{MPP}	γ	[%/K]	-0.36	Nominal Module Operating Temperature	NMOT	[°C]	43 ± 3

PROPERTIES FOR SYSTEM DESIGN

Maximum System Voltage	V_{SYS}	[V]	1000	Fire Rating	Class II
Maximum Reverse Current	I_R	[A]	20	Fire Rating based on ANSI/UL 61730	C/TYPE 2
Max. Design Load, Push/Pull		[Pa]	3600/2800	Permitted Module Temperature on Continuous Duty	-40°C ... +85°C
Max. Test Load, Push/Pull		[Pa]	5400/4000		

QUALIFICATIONS AND CERTIFICATES

VDE Quality Tested, IEC 61215 (ed. 2), IEC 61730:2016, application class A, IEC 62716, IEC 61701 (salt mist corrosion severity 6), IEC 62804-1

Waste electrical and electronic equipment, in accordance with the European Directive 2012/19/EC (WEEE)

CE

PACKAGING INFORMATION

Horizontal packaging	1750mm	1083mm	1220mm	673 kg	25 pallets	26 frames	32 modules
Vertical packaging	1815mm	1150mm	1220mm	683 kg	28 pallets	24 pallets	32 modules

Note: Information with regard to the installation, handling, storage, transport, use and recycling of Q CELLS modules which deviate from or are not covered by the applicable IEC or other relevant standards, or which are not in accordance with Q CELLS product documentation, must be agreed in writing with Q CELLS.

Hanwha Q CELLS GmbH
Sonnenallee 17-21, 06766 Bitterfeld-Wolfen, Germany | TEL +49 (0)3494 90 99-23444 | FAX +49 (0)3494 90 99-23000 | EMAIL cells@q-cells.com | WEB www.q-cells.com

Engineered in Germany

Q CELLS

GREEN PANEL
4023 South Old US Highway 23 #115 Brighton, MI 48114

REVISIONS		
DESCRIPTION	DATE	REV

Signature with Seal

CUSTOMER INFORMATION

RAMOS RESIDENCE
1047 PILGRIM AVENUE,
BIRMINGHAM, MI 48009

SHEET NAME
EQUIPMENT SPECIFICATION

SHEET SIZE
ANSI B
11" X 17"

SHEET NUMBER
PV-6

Data Sheet
Enphase Microinverters
Region: AMERICAS

Enphase IQ 7, IQ 7+, and IQ 7X Microinverters

with EN4 bulkhead

The high-powered smart grid-ready Enphase IQ 7 Series Microinverters™ with Enphase EN4 bulkhead dramatically simplify the installation process while achieving the highest system efficiency.

Part of the Enphase IQ System, the IQ 7, IQ 7+, and IQ 7X Microinverters integrate with the Enphase IQ Envoy™, Enphase IQ Battery™, and the Enphase Enlighten™ monitoring and analysis software.

IQ Series Microinverters extend the reliability standards set forth by previous generations and undergo over a million hours of power-on testing, enabling Enphase to provide an industry-leading warranty of up to 25 years.

Easy to Install

- Lightweight and simple
- Faster installation with improved, lighter two-wire cabling
- Built-in rapid shutdown compliant (NEC 2014, 2017, & 2020)
- Integrated Enphase EN4 bulkhead allows for direct connection to PV modules with TE PV4S SOLARLOK connectors or other intermatable connectors[1]

Productive and Reliable

- Optimized for high-powered 60-cell, 72-cell[2], and 96-cell[3] modules
- More than a million hours of testing
- Class II double-insulated enclosure
- UL listed

Smart Grid Ready

- Complies with advanced grid support, voltage and frequency ride-through requirements
- Remotely updates to respond to changing grid requirements
- Configurable for varying grid profiles
- Meets CA Rule 21 (UL 1741-SA)

1. Enphase adapters are available for use with other connectors. Consult Enphase for more information.
2. The IQ 7+ Microinverter is required to support 72-cell modules.
3. The IQ 7X Microinverter is required to support 96-cell modules.

To learn more about Enphase offerings, visit **enphase.com**

ENPHASE

Enphase IQ 7 and IQ 7+ Microinverters with EN4 bulkhead

INPUT DATA (DC)	IQ7-60-E-US		IQ7PLUS-72-E-US		IQ7X-96-E-US	
Commonly used module pairings[4]	235 W - 350 W +		235 W - 440 W +		320 W - 460 W +	
Module compatibility	60-cell PV modules only		60-cell and 72-cell PV modules		96-cell PV modules	
Maximum input DC voltage	48 V		60 V		79.5 V	
Peak power tracking voltage	27 V - 37 V		27 V - 45 V		53 V - 64 V	
Operating range	16 V - 48 V		16 V - 60 V		25 V - 79.5 V	
Min/Max start voltage	22 V / 48 V		22 V / 60 V		33 V / 79.5 V	
Max DC short circuit current (module Isc)	15 A		15 A		10 A	
Overvoltage class DC port	II		II		II	
DC port backfeed current	0 A		0 A		0 A	
PV array configuration	1 x 1 ungrounded array; No additional DC side protection required; AC side protection requires max 20A per branch circuit					
OUTPUT DATA (AC)	**IQ 7 Microinverter**		**IQ 7+ Microinverter**		**IQ 7X Microinverter**	
Peak output power	250 VA		295 VA		320 VA	
Maximum continuous output power	240 VA		290 VA		315 VA	
Nominal (L-L) voltage/range[5]	240 V / 211-264 V	208 V / 183-229 V	240 V / 211-264 V	208 V / 183-229 V	240 V / 211-264 V	208 V / 183-229 V
Maximum continuous output current	1.0 A (240 V)	1.15 A (208 V)	1.21 A (240 V)	1.39 A (208 V)	1.31 A (240 V)	1.51 A (208 V)
Nominal frequency	60 Hz		60 Hz		60 Hz	
Extended frequency range	47 - 68 Hz		47 - 68 Hz		47-68 Hz	
AC short circuit fault current over 3 cycles	5.8 Arms		5.8 Arms		5.8 Arms	
Maximum units per 20 A (L-L) branch circuit[6]	16 (240 VAC)	13 (208 VAC)	13 (240 VAC)	11 (208 VAC)	12 (240 VAC)	10 (208 VAC)
Overvoltage class AC port	III		III		III	
AC port backfeed current	18mA		18mA		18 mA	
Power factor setting	1.0		1.0		1.0	
Power factor (adjustable)	0.85 leading ... 0.85 lagging		0.85 leading ... 0.85 lagging		0.85 leading ... 0.85 lagging	
EFFICIENCY	**@240 V**	**@208 V**	**@240 V**	**@208 V**	**@240 V**	**@208 V**
Peak efficiency	97.6 %	97.6 %	97.5 %	97.3 %	97.5 %	97.3 %
CEC weighted efficiency	97.0 %	97.0 %	97.0 %	97.0 %	97.5 %	97.0 %
MECHANICAL DATA						
Ambient temperature range	-40°C to +65°C (-40°F to +140°F)		-40°C to +65°C (-40°F to +149°F)		-40°C to +60°C (-40°F to +140°F)	
Relative humidity range	4% to 100% (condensing)					
Connector type	Enphase EN4 bulkhead					
Adapters[7] (optional)	1. ECA-EN4-S22: DC adapter, EN4 to Multi-Contact MC4 type, 150 mm (5.9in) 2. ECA-EN4-S22-L: DC adapter, EN4 to Multi-Contact MC4 type, 600 mm (23.6in) 3. ECA-EN4-FW: DC adapter, EN4 to unterminated cable, 150 mm (5.9in), for wiring of any DC connector type.					
Dimensions (HxWxD)	212 mm x 175 mm x 30.2 mm (without bracket)					
Weight	1.08 kg (2.38 lbs)					
Cooling	Natural convection - No fans					
Approved for wet locations	Yes					
Pollution degree	PD3					
Enclosure	Class II double-insulated, corrosion resistant polymeric enclosure					
Environmental category / UV exposure rating	NEMA Type 6 / outdoor					
FEATURES						
Communication	Power Line Communication (PLC)					
Monitoring	Enlighten Manager and MyEnlighten monitoring options Both options require installation of an Enphase IQ Envoy.					
Disconnecting means	The AC and DC connectors have been evaluated and approved by UL for use as the load-break disconnect means required by NEC 690 and C22.1-2018 Rule 64-220					
Compliance	CA Rule 21 (UL 1741-SA) UL 62109-1, UL1741/IEEE1547, FCC Part 15 Class B, ICES-0003 Class B, CAN/CSA-C22.2 NO. 107.1-01 This product is UL Listed as PV Rapid Shut Down Equipment and conforms with NEC 2014, NEC 2017, and NEC 2020 section 690.12 and C22.1-2018 Rule 64-218 Rapid Shutdown of PV Systems, for AC and DC conductors, when installed according manufacturer's instructions.					

4. No enforced DC/AC ratio. See the compatibility calculator at https://enphase.com/en-us/support/module-compatibility
5. Nominal voltage range can be extended beyond nominal if required by the utility.
6. Limits may vary. Refer to local requirements to define the number of microinverters per branch in your area.
7. Adapters 1 and 2 are qualified per UL subject 9703. Adapter 3 requires installers to field install their choice of connector.

To learn more about Enphase offerings, visit **enphase.com**

© 2020 Enphase Energy. All rights reserved. Enphase, the Enphase logo, Enphase IQ 7, Enphase IQ 7+, Enphase IQ Battery, Enphase Enlighten, Enphase IQ Envoy, and other trademarks or service names are the trademarks of Enphase Energy, Inc. Data subject to change. 2020-04-13

ENPHASE

GREEN PANEL
4023 South Old US Highway 23 #115 Brighton, MI 48114

REVISIONS		
DESCRIPTION	DATE	REV

Signature with Seal

CUSTOMER INFORMATION

RAMOS RESIDENCE

1047 PILGRIM AVENUE,
BIRMINGHAM, MI 48009

SHEET NAME
EQUIPMENT SPECIFICATION

SHEET SIZE
ANSI B
11" X 17"

SHEET NUMBER
PV-7

Enphase Q Aggregator and Q Cable Accessories

The Enphase Q Aggregator™ and Enphase Q Cable™ are part of the sixth generation Enphase IQ System™. These accessories provide simplicity, reliability, and faster installation times.

Enphase Q Aggregator

- Reduces electrical labor and eliminates wire nuts for safer, faster installations
- Aggregates up to three fully populated 20A branch circuits
- Supports solar arrays of up to 11.5 kW with a single rooftop aggregator

Enphase Q Cable

- Two-wire Enphase Q Cable is 50% lighter than the previous generation Enphase cable
- New cable numbering and plug and play connectors speed up installation and simplify wire management
- Link connectors eliminate cable waste

Field-Wireable Connectors

- Easily connect Q cables on the roof without complex wiring
- Make connections from any open connector and center feed any section of cable within branch limits
- Available in male and female connector types

c UL us

To learn more about Enphase offerings, visit enphase.com

ENPHASE

Enphase Q Cable Accessories

Q AGGREGATOR SPECIFICATIONS	
Model number	Q-BA-3-1P-60
Dimensions	190 mm (W) x 227 mm (D) x 80 mm (H) (7.5 in (W) x 9 in (D) x 3.2 in (H))
Enclosure rating	NEMA3 (up to 45° from horizontal)
Temperature range	-40° C to +55° C (-40° F to +122° F)
Compliance	UL1703, EN62109, UL 6703A

Q CABLE SPECIFICATIONS	
Voltage rating	600V (connector rating 250 V)
Cable temperature rating	90° C (194° F)
Certification	UL3003, OG cable
Flame test rating	FT4
Compliance	RoHS, OIL RES I, CE, UV resistant, combined UL for Canada and United States
Cable insulator rating	THHN/THWN 2 dry/wet

Q CABLE TYPES / ORDERING OPTIONS

Model Number	Voltage	Connector Spacing	PV Module Orientation	Connector Count per Box
Q-12-10-240	240 (max rating 250 VAC)	1.3 m (4.2 ft)	Portrait	240
Q-12-17-240	240 (max rating 250 VAC)	2.0 m (6.5 ft)	Landscape (60-cell)	240
Q-12-20-200	240 (max rating 250 VAC)	2.3 m (7.5 ft)	Landscape (72-cell)	200

ENPHASE Q CABLE ACCESSORIES

Name	Model Number	Description
Enphase Q Aggregator	Q-BA-3-1P-60	Combines up to three microinverter branches into one home run
Field-wireable connector (male)	Q-CONN-10M	Make connections from any Q Aggregator open connector
Field-wireable connector (female)	Q-CONN-10F	Make connections from any Q Cable open connector
Cable clip	Q-CLIP-100	Used to fasten cabling to the racking or to secure looped cabling
Disconnect tool	Q-DISC-10	Disconnect tool for Q Cable connectors, DC connectors, and AC module mount
Q Aggregator sealing caps (male)	Q-BA-CAP-10	Sealing cap for unused aggregator connections
Q Cable sealing caps (female)	Q-SEAL-10	One needed to cover each unused connector on the cabling
Terminator	Q-TERM-10	Terminator cap for unused cable ends
Replacement DC Adaptor (MC4)	Q-DCC-2	DC adaptor to MC4 (max voltage 100 VDC)
Replacement DC Adaptor (UTX)	Q-DCC-5	DC adaptor to UTX (max voltage 100 VDC)

TERMINATOR

Terminator cap for unused cable ends, sold in packs of ten

Q-TERM-10

SEALING CAPS

Sealing caps for unused aggregator and cable connections (Q-BA-CAP-10 and Q-SEAL-10)

DISCONNECT TOOL

Plan to use at least one per installation, sold in packs of ten (Q-DISC-10)

CABLE CLIP

Used to fasten cabling to the racking or to secure looped cabling, sold in packs of ten (Q-CLIP-100)

To learn more about Enphase offerings, visit enphase.com

© 2017 Enphase Energy. All rights reserved. All trademarks or brands used are the property of Enphase Energy, Inc.
2017-03-09

ENPHASE

GREEN PANEL
4023 South Old US Highway 23 #115 Brighton, MI 48114

REVISIONS

DESCRIPTION	DATE	REV

Signature with Seal

CUSTOMER INFORMATION

RAMOS RESIDENCE
1047 PILGRIM AVENUE,
BIRMINGHAM, MI 48009

SHEET NAME
EQUIPMENT SPECIFICATION

SHEET SIZE
ANSI B
11" X 17"

SHEET NUMBER
PV-8

Tech Brief

IRONRIDGE

XR Rail Family

Solar Is Not Always Sunny

Over their lifetime, solar panels experience countless extreme weather events. Not just the worst storms in years, but the worst storms in 40 years. High winds capable of ripping panels from a roof, and snowfalls weighing enough to buckle a panel frame.

XR Rails are the structural backbone preventing these results. They resist uplift, protect against buckling and safely and efficiently transfer loads into the building structure. Their superior spanning capability requires fewer roof attachments, reducing the number of roof penetrations and the amount of installation time.

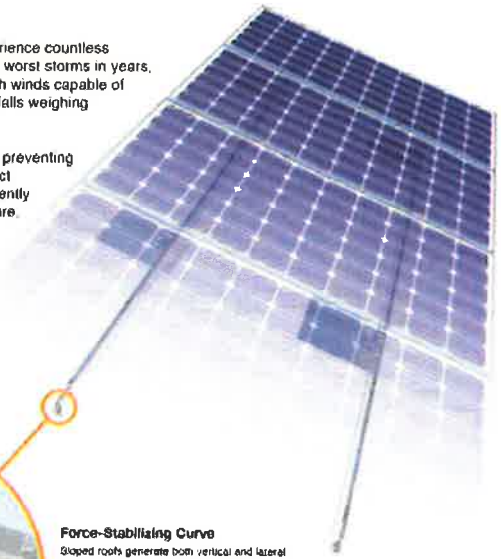

Force-Stabilizing Curve

Sloped roofs generate both vertical and lateral forces on mounting rails which can cause them to bend and twist. The curved shape of XR Rails is specially designed to increase strength in both directions while resisting the twisting. This unique feature ensures greater security during extreme weather and a longer system lifetime.

Compatible with Flat & Pitched Roofs

XR Rails are compatible with FlashFoot and other pitched roof attachments.

IronRidge offers a range of tilt leg options for flat roof mounting applications.

Corrosion-Resistant Materials

All XR Rails are made of 6000-series aluminum alloy, then protected with an anodized finish. Anodizing prevents surface and structural corrosion, while also providing a more attractive appearance.

Datasheet

XR Rails

XR10 Rail

A low-profile mounting rail for regions with light snow.

- 6' spanning capability
- Moderate load capability
- Clear and black finish

XR100 Rail

The ultimate residential solar mounting rail.

- 8' spanning capability
- Heavy load capability
- Clear and black finish

XR1000 Rail

A heavyweight mounting rail for commercial projects.

- 12' spanning capability
- Extreme load capability
- Clear anodized finish

Bonded Splices

All rails use internal splices for seamless connections.

- Self-drilling screws
- Varying versions for rails
- Forms secure bonding

Clamps & Grounding

UFOs

Universal Fastening Objects bond modules to rails.

- Fully assembled & lubed
- Single, universal size
- Clear and black finish

Stopper Sleeves

Snap onto the UFO to turn into a bonded end clamp.

- Bonds modules to rails
- Sized to match modules
- Clear and black finish

CAMO

Bond modules to rails while staying completely hidden.

- Universal end-cam clamp
- Tool-less installation
- Fully assembled

Grounding Lugs

Connect arrays to equipment ground.

- Low profile
- Single tool installation
- Mounts in any direction

Attachments

FlashFoot2

Flash and mount XR Rails with superior waterproofing.

- Twist-on Cap eases install
- Wind-driven rain tested
- Mill and black finish

Conduit Mount

Flash and mount conduit, strut, or junction boxes.

- Twist-on Cap eases install
- Wind-driven rain tested
- Secures ¾" or 1" conduit

Slotted L-Feet

Drop-in design for rapid rail attachment.

- Secure rail connections
- Slot for vertical adjusting
- Clear and black finish

Bonding Hardware

Bond and attach XR Rails to roof attachments.

- T & Square Bolt options
- Nut uses 7/16" socket
- Assembled and lubricated

Resources

Design Assistant

Go from rough layout to fully engineered system. For free.

Go to IronRidge.com/design

NABCEP Certified Training

Earn free continuing education credits, while learning more about our systems.

Go to IronRidge.com/training

© 2018 IronRidge, Inc. All rights reserved. U.S. Patents 8,925,263; 9,010,034; 9,074,368; 9,337,770; 9,482,262; 9,745,993; Other Pending. Version 1.18

GREEN PANEL
4023 South Old US Highway 23 #115 Brighton, MI 48114

REVISIONS		
DESCRIPTION	DATE	REV

Signature with Seal

CUSTOMER INFORMATION

RAMOS RESIDENCE

1047 PILGRIM AVENUE, BIRMINGHAM, MI 48009

SHEET NAME
EQUIPMENT SPECIFICATION

SHEET SIZE
ANSI B
11" X 17"

SHEET NUMBER
PV-9

Tech Brief

System Diagram

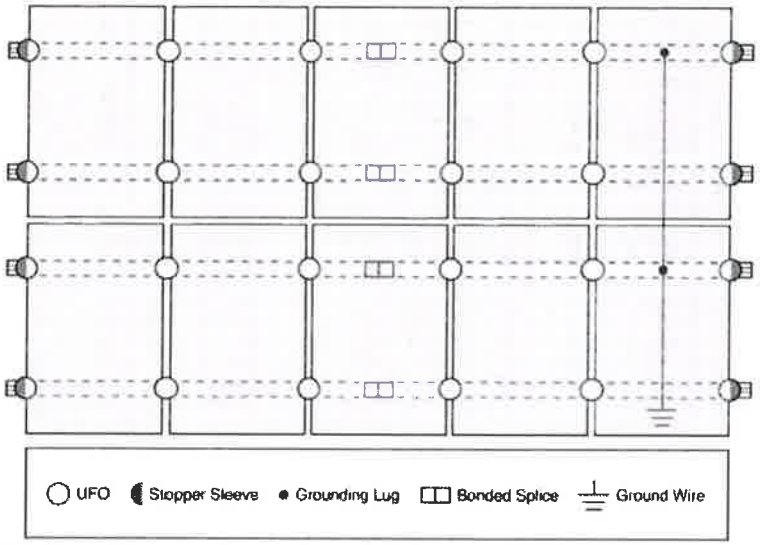

♀ Approved Enphase microinverters can provide equipment grounding of IronRidge systems, eliminating the need for grounding lugs and field installed equipment ground conductors (EGC). A minimum of two microinverters mounted to the same rail and connected to the same Engage cable is required. Refer to installation manuals for additional details.

UL Certification

The IronRidge Flush Mount, Tilt Mount, and Ground Mount Systems have been listed to UL 2703 by Intertek Group plc.

UL 2703 is the standard for evaluating solar mounting systems. It ensures these devices will maintain strong electrical and mechanical connections over an extended period of time in extreme outdoor environments.

Go to IronRidge.com/UFO

Cross-System Compatibility			
Feature	Flush Mount	Tilt Mount	Ground Mount
XR Rails	✔	✔	XR1000 Only
UFO/Stopper	✔	✔	✔
Bonded Splice	✔	✔	N/A
Grounding Lugs	1 per Row	1 per Row	1 per Array
Microinverters & Power Optimizers	Enphase - M250-72, M250-60, M215-60, C250-72 Darfon - MIG240, MIG300, G320, G640 SolarEdge - P300, P320, P400, P405, P600, P700, P730		
Fire Rating	Class A	Class A	N/A
Modules	Tested or Evaluated with over 400 Framed Modules Refer to installation manuals for a detailed list		

Tech Brief

IRONRIDGE

UFO Family of Components

Simplified Grounding for Every Application

The UFO family of components eliminates the need for separate grounding hardware by bonding solar modules directly to IronRidge XR Rails. All system types that feature the UFO family—Flush Mount, Tilt Mount and Ground Mount—are fully listed to the UL 2703 standard.

UFO hardware forms secure electrical bonds with both the module and the rail, resulting in many parallel grounding paths throughout the system. This leads to safer and more reliable installations.

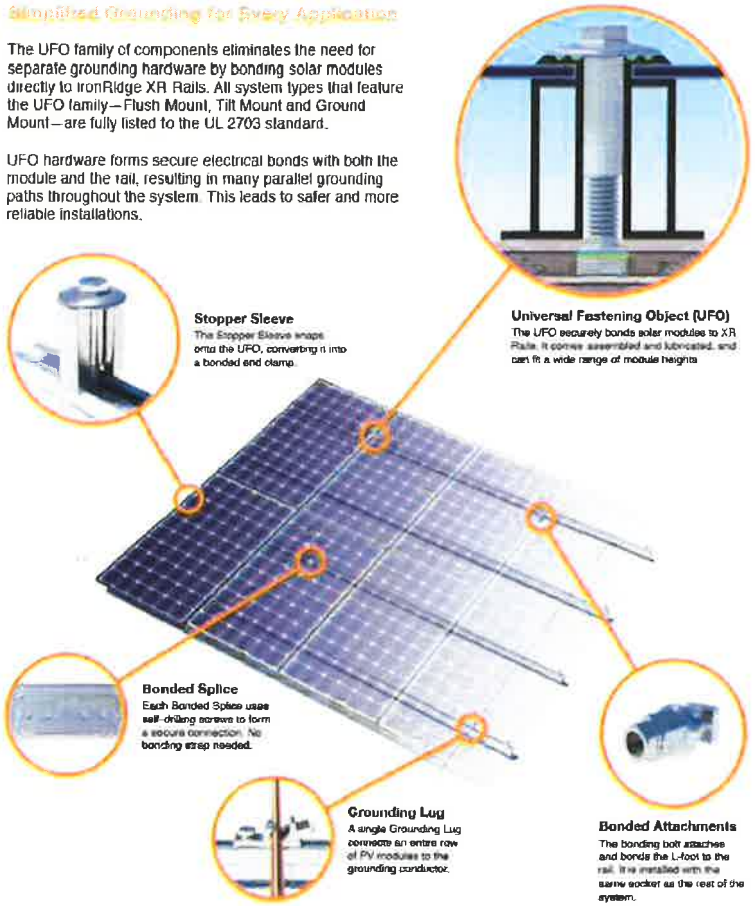

GREEN PANEL
4023 South Old US Highway 23 #115 Brighton, MI 48114

REVISIONS		
DESCRIPTION	DATE	REV

Signature with Seal

CUSTOMER INFORMATION

RAMOS RESIDENCE
1047 PILGRIM AVENUE,
BIRMINGHAM, MI 48009

SHEET NAME
EQUIPMENT SPECIFICATION

SHEET SIZE
ANSI B
11" X 17"

SHEET NUMBER
PV-10

System Diagram

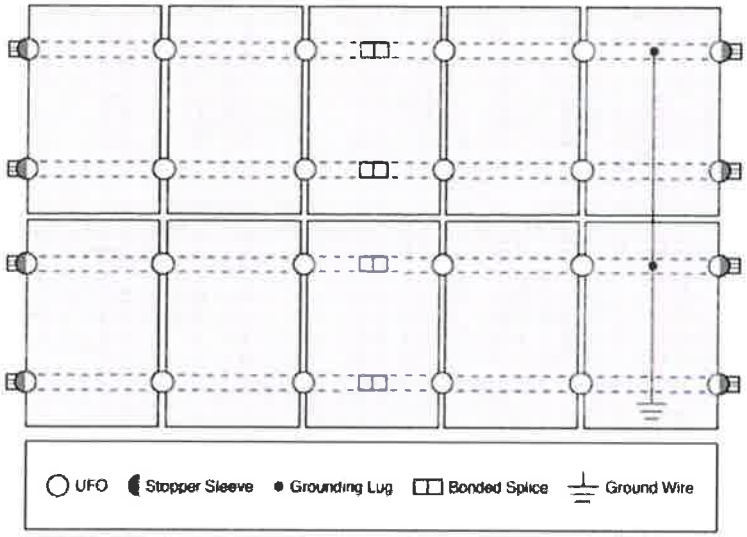

Approved Enphase microinverters can provide equipment grounding of IronRidge systems, eliminating the need for grounding lugs and field installed equipment ground conductors (EGC). A minimum of two microinverters mounted to the same rail and connected to the same Engage cable is required. Refer to installation manuals for additional details.

UL Certification

The IronRidge Flush Mount, Tilt Mount, and Ground Mount Systems have been listed to UL 2703 by Intertek Group plc.

UL 2703 is the standard for evaluating solar mounting systems. It ensures these devices will maintain strong electrical and mechanical connections over an extended period of time in extreme outdoor environments.

Go to IronRidge.com/UFO

Cross-System Compatibility			
Feature	Flush Mount	Tilt Mount	Ground Mount
XR Rails	✔	✔	XR1000 Only
UFO/Stopper	✔	✔	✔
Bonded Splice	✔	✔	N/A
Grounding Lugs	1 per Row	1 per Row	1 per Array
Microinverters & Power Optimizers	Enphase - M250-72, M250-60, M215-60, C250-72 Darfon - MIG240, MIG300, G320, G640 SolarEdge - P300, P320, P400, P405, P600, P700, P730		
Fire Rating	Class A	Class A	N/A
Modules	Tested or Evaluated with over 400 Framed Modules Refer to installation manuals for a detailed list.		

IRONRIDGE

Class A Fire Rating

Background

All roofing products are tested and classified for their ability to resist fire.

Recently, these fire resistance standards were expanded to include solar equipment as part of the roof system. Specifically, this requires the modules, mounting hardware and roof covering to be tested together as a system to ensure they achieve the same fire rating as the original roof covering.

These new requirements are being adopted throughout the country in 2016.

IronRidge Certification

IronRidge was the first company to receive a Class A Fire Rating—the highest possible rating—from Intertek Group plc., a Nationally Recognized Testing Laboratory.

IronRidge Flush Mount and Tilt Mount Systems were tested on sloped and flat roofs in accordance with the new UL 1703 & UL 2703 test standards. The testing evaluated the system's ability to resist flame spread, burning material and structural damage to the roof.

Refer to the table below to determine the requirements for achieving a Class A Fire Rating on your next project.

Fire Testing Process

Test Setup

Solar Modules
Solar modules are given a Type classification based on their materials and construction

Mounting System
Mounting is tested as part of a system that includes type-tested modules and fire-rated roof covering

Roof Covering
Roof covering products are given a Fire Class Rating of A, B or C based on their tested fire resistance.

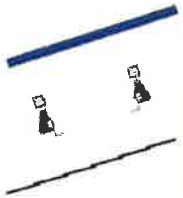

Burning Brand Test

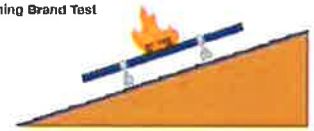

A burning wooden block is placed on module as a fan blows at 12 mph. Flame cannot be seen on underside of roof within 90 minutes.

Spread of Flame Test

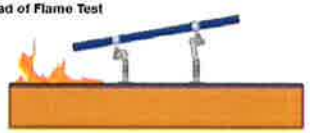

Flame at southern edge of roof is aimed up the roof as a fan blows at 12 mph. The flame cannot spread 6 feet or more in 10 minutes.

System	Roof Slope	Module	Fire Rating*
Flush Mount	Any Slope	Type 1, 2, & 3	Class A
Tilt Mount	≤ 6 Degrees	Type 1, 2, & 3	Class A

*Class B rated PV systems can be installed on Class A, B, and C roofs

GREEN PANEL
4023 South Old US Highway 23 #115 Brighton, MI 48114

REVISIONS

DESCRIPTION	DATE	REV

Signature with Seal

CUSTOMER INFORMATION

RAMOS RESIDENCE
1047 PILGRIM AVENUE,
BIRMINGHAM, MI 48009

SHEET NAME
EQUIPMENT SPECIFICATION

SHEET SIZE
ANSI B
11" X 17"

SHEET NUMBER
PV-11

RT-MINI

Self-flashing base for asphalt & metal roof-top PV mounting systems

RT-MINI is suitable for mounting any rail system with a conventional L-Foot.

Dual bolt design: M8 or 5/16" for L-Foot & 1/4" for EMC

ICC ESR 3575

Call Now for more details
858-935-6064

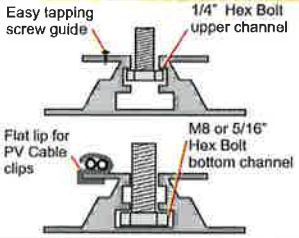

RT-MINI

Flexible Flashing certified by the International Code Council (ICC)

Engineered to ASTM D 1761 (Standard Test Methods for Mechanical Fasteners In Wood)

Components

RT2-00-MINIBK
PAT : PENDING

MINI base : 20 ea.
Screw : 40 ea.
Extra RT-Butyl : 10 ea.

Optional item
5 x 60mm Mounting screw (RT2-04-SD5-60) : 100 ea./Bag
5/16" Hex bolt, washer & nut set (RT-04-BN30SL-US) : 100 ea./Bag
RT-Butyl (RT2-04-BUTYLT) : 10 ea./Box

RT-Butyl is Roof Tech's flexible flashing used in 700,000 residential PV systems for the last 24 years. It is the first PV mounting system with Flexible Flashing certified by the ICC.

Metal Flashing Retrofit

Flexible Flashing

Shedding water?

100% Waterproof

ICC ESR-3575

ASTM2140 testing

UV testing (7500 hrs.)

Dimensions in (mm)

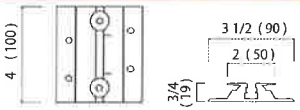

Rafter installation

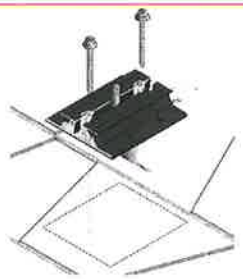

Deck installation

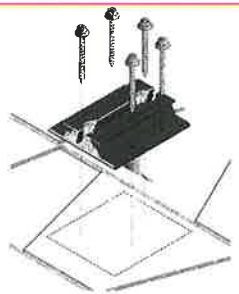

P.E. Stamped Letters available at www.roof-tech.us/support

Roof Tech
Smarter PV mounting solutions from top of roof to bottom line
www.roof-tech.us info@roof-tech.us

Roof Tech Inc.
www.roof-tech.us info@roof-tech.us
10620 Treena Street, Suite 230, San Diego, CA 92131
858.935.6064

25 YEARS

GREEN PANEL
4023 South Old US Highway 23 #115 Brighton, MI 48114

REVISIONS		
DESCRIPTION	DATE	REV

Signature with Seal

CUSTOMER INFORMATION

RAMOS RESIDENCE
1047 PILGRIM AVENUE,
BIRMINGHAM, MI 48009

SHEET NAME
EQUIPMENT SPECIFICATION

SHEET SIZE
ANSI B
11" X 17"

SHEET NUMBER
PV-12

Sec. 82-204. - Solar energy systems.

Solar energy systems include solar collector surfaces and ancillary electrical equipment that are either affixed to a permanent principal or accessory building, or as a freestanding structure. A solar energy system collects, stores, and/or distributes solar energy for heating or cooling, generating electricity, or heating water.

Solar energy systems are permitted in all districts as an accessory use subject to the following:

(1) Ground mounted solar energy systems shall meet the location and setback requirements applicable to detached accessory buildings (see section 82-193).

(2) Roof mounted solar energy equipment shall be permitted on principal and accessory buildings provided that the panels or solar collector surface does not increase the total height of the structure above the maximum allowable height of the structure on which it is located, in accordance with the applicable zoning regulations.

(3) Solar energy collectors shall be designed to either:

a. Faithfully replicate the appearance of standard roofing materials, or

b. Minimize glare and be uniform in color. Frames (internal and external) shall be the same color as the collector surface. All panels shall have an anti-reflective coating.

(Ord. of 7-14-2009, § 26-13.12; Ord. No. 428, § 1, 1-9-2018)

Sec. 24-183. - Accessory buildings, structures and uses.

Accessory buildings and structures shall be constructed in accordance with the following section. A permit from the community development department is required prior to construction.

(1) *Residential uses.* Accessory buildings and structures within residential districts shall comply with the following requirements:

a. Accessory buildings or structures shall not be built upon a lot or parcel unless and until a principal building is erected.

b. Where a garage or carport is structurally attached to the principal building, it shall be built only in the rear or side yard and shall be considered part of the principal building for purposes of all setback regulations and building codes applicable to principal buildings.

c. Front facade attached garages shall be allowed if all of the following conditions are met:

1. Any front facade garage will be set back a minimum of five feet from the building facade.
2. Any single garage door will not exceed eight feet in width or eight feet in height.
3. Any two garage doors will be separated by a minimum two-foot solid jamb.
4. The garage opening on the building facade shall not exceed 50 percent of the total linear building frontage.

d. Detached accessory buildings or structures shall not be constructed within ten feet of any principal building located on the same lot or parcel.

e. One accessory building shall be permitted per lot unless the lot is of such dimension that a second structure can be built at least 25 feet from any other building or structure located on the same lot and a minimum of five feet from any property line or edge of an easement, or three feet in the side yard setback, if construction is fire-resistance rated according to the current Michigan Residential Code.

f. Detached accessory buildings and structures shall be located a minimum of five feet from any adjoining lot line or easement, or three feet in the side yard setback, if construction is fire-resistance rated according to the current Michigan Residential Code. On corner lots and alleys, detached accessory buildings and structures shall be located at least ten feet from the lot line adjacent to the side street or alley.

g. All accessory buildings and structures shall be located in the side or rear yard.

h. Accessory buildings and structures shall be included in lot coverage limitations.

i. The building height of an accessory building or structure shall not exceed 16 feet.

j. Detached carports shall not be constructed closer to the side or rear lot line than the permitted distance for a residential garage. Portions of the carport shall not extend into the required front yard area. Detached carport structures for multiple family residential dwellings shall be screened in accordance with applicable city ordinances.

k. Accessory buildings located on double frontage (through) lots shall observe front yard setback requirements on both streets.

l. Play structures for children shall not be considered accessory buildings, but shall comply with the provisions of subsections (1)a, d., f. and g., above.

m. Detached accessory buildings or structures shall not have a greater square footage than the principal building on the same lot.

(2) *Non-residential uses.* Accessory buildings and structures within all other districts shall comply with the following requirements:

a. Accessory buildings or structures shall not be built upon a lot or parcel unless and until a principal building

b. Accessory buildings and structures shall be subject to all of the same requirements as principal buildings in the district in which they are located.

c. Accessory buildings located on double frontage (through) lots shall observe front yard setback requirements on both streets.

(3) *Energy uses.*

a. *Wind energy conversion systems (WECS).* WECS designed to service the energy needs of the property where the structure is located shall be allowed as an accessory structure in all districts, subject to the following requirements:

1. Only one WECS shall be permitted per lot.
2. The height of the overall WECS with the blade in the vertical position shall not exceed 80 feet above ground level.
3. All towers shall be set back a distance at least equal to the height of the overall WECS from all lot lines. The height shall be measured to the top of the blade at its highest point.
4. Blade arcs created by a WECS shall not interfere with any structure, utilities or vegetation. The minimum blade or rotor clearance above ground level shall be at least 20 feet.
5. All towers used to support the wind generating equipment shall be adequately anchored.
6. The WECS shall be equipped with both a manual and automatic braking device capable of stopping the WECS operation in high winds within 80 percent of design limits of the rotor.
7. Noise emissions from the operation of a WECS shall not exceed 45 decibels on the DBA scale as measured at the nearest lot line or road.
8. To prevent unauthorized climbing, the WECS must include an anti-climb device.
9. Any WECS not used for one year or longer shall be deemed to be abandoned and shall be promptly dismantled and removed from the property by the owner of the WECS.

b. *Solar energy systems.* Solar energy systems designed to service the energy needs of the property where the structure is located shall be allowed as an accessory structure in all districts, subject to the following requirements:

1. Solar energy systems shall meet the requirements of this section and all other applicable construction codes.
2. The design of the solar energy system shall conform to applicable industry standards.
3. Solar energy systems shall be screened per the discretion of the community development department.
4. Solar energy systems shall meet height and setback requirements of the zoning district in which they are located.
5. Solar energy systems shall be securely anchored to the ground or a permanent structure.
6. A ground-mounted solar energy system shall comply with the accessory structure restrictions contained in the zoning district where it is located.
7. All exterior electrical and/or plumbing lines must be buried below the surface of the ground in compliance with current code.
8. Any solar energy system not used for one year or longer shall be deemed to be abandoned and shall be promptly dismantled and removed from the property by the owner of the solar energy system.
9. Waiver. Upon request, the planning commission may grant waivers of the setback or height

requirements, provided that the waiver will not present any undue hardships on adjoining properties. The planning commission shall take into consideration the support or opposition of adjacent property owners in granting waivers of setback or height requirements.

(4) *Outdoor display, sales and storage.* Outdoor display, sales, or storage accessory to an approved principal use may be approved by the planning commission if deemed compatible with surrounding land uses and found to be compatible with the character of the area in accordance with the following:

a. *In general.*

1. Goods and materials shall not be piled or stacked higher than the height of the screening wall. Vehicles, truck trailers, implements, and recreational vehicles may exceed the height of the screening wall provided that they are set back from the screening wall a distance equal to their height.
2. The outdoor display, sales and storage of fertilizers, pesticides, and other hazardous materials is prohibited.
3. Soil, sand, mulch, and similar loosely packaged materials shall be contained and covered to prevent it from blowing into adjacent properties.
4. All areas shall be paved with a permanent, durable, and dustless surface and shall be graded and drained to dispose of all surface water.
5. The applicant shall demonstrate there will be adequate parking for the existing uses as well as the proposed outdoor sales, display or storage.
6. The location shall not interfere with public passage or the otherwise normal flow of pedestrian or vehicular traffic.
7. Lighting for security purposes may be required as determined by the planning commission.
8. Temporary uses that occur for less than two weeks in any calendar year are exempt from these regulations.

b. *Display or sales.*

1. Outdoor display or sales is permitted in all mixed-use, commercial, and office districts.
2. Outdoor display or sales areas may occupy up to 15 percent of each front, side, and rear yard respectively, provided all setbacks are met.
3. Outdoor display or sales areas shall be screened from view by a masonry wall where the display area abuts a residential district.

c. *Storage.*

1. Outdoor storage is permitted in all industrial districts.
2. Screening of outdoor storage areas shall consist of any combination of fences, walls, berms and landscaping that are at least eight feet in height that in the opinion of the city provides a permanent, opaque, year-round screening around the entire perimeter of the outdoor storage area.
3. Outdoor storage shall not be located in the front yard.

(5) *Temporary construction uses.*

a. Temporary buildings and structures may only be used for the storage of construction materials, tools, supplies and equipment, for construction management and supervision offices, and for temporary on-site sanitation, solid waste, or fuel facilities, related to construction activity on the same lot.

b. The building or structure shall not be used for dwelling purposes.

c. Temporary buildings and structures shall be removed from the lot within 30 days after an occupancy permit is issued by the community development department for the permanent structure on such lot, or

within 30 days after the expiration of a building permit issued for construction on such lot.

(6) *Portable moving and storage containers.* A single portable moving and storage container may be placed on an occupied lot for the purpose of loading or unloading items to be transported to another location, subject to the following restrictions:

a. The portable moving and storage container may be placed on an occupied lot for up to 30 days.

b. The container shall be located on a paved surface on the lot and shall not be located in the public right-of-way or a private road easement.

c. This section shall not apply to freight containers or truck trailers located in an industrial district in accordance with D above.

(7) *Donation boxes and vending machines.*

a. Outdoor donation boxes shall be permitted in the C-3, OS, M-1, M-2, and P-1 districts. They shall not be permitted in the front yard, or any landscape greenbelt and shall not be permitted in a location that would block parking spaces, or loading areas and shall not obstruct vehicular and pedestrian circulation, fire lanes, or sidewalks.

b. Outdoor vending machines shall be prohibited. This provision shall not apply to racks.

(Ord. No. 1087, § 9.03, 3-8-10; Ord. No. 1203 , Pt. I, 1-8-18)

§ 770-54. Wind and solar energy systems. [Added 6-15-2009 by Ord. No. 2009-06]

A. Purpose and intent. It is the general purpose and intent of the City to balance the need for clean, renewable and abundant energy resources that may reduce dependence upon scarce and nonrenewable fossil fuels, with the necessity to protect the public health, safety and welfare of the city, as well as to preserve the integrity, character, property values, and aesthetic quality of the community at large. The City therefore finds these regulations are necessary in order to facilitate adequate provision of sites for wind and solar energy systems and ensure they are situated in appropriate locations and relationships to other land uses, structures and buildings, without significantly increasing the cost or decreasing the efficiency of such systems.

B. Authorization.

(1) Wind energy systems with a rated capacity of up to 20 kilowatts (20 kw) and solar energy systems shall be allowed as an accessory use in any zoning district, subject to the required standards of this section, provided that they are to be incidental and subordinate to a use on the same parcel and shall supply electrical power exclusively for on-site consumption, except as otherwise provided by this chapter.

(2) Wind and solar energy systems may be connected to the electrical grid when a parcel on which the system is installed also receives electrical power supplied by a utility company. If a parcel on which a system is installed also receives electrical power supplied by a utility company, excess electrical power generated and not presently needed for on-site use may be used by the utility company in accordance with applicable state and federal law.

(3) Solar energy systems and wind energy systems with a rated capacity of more than 20 kilowatts (20 kw) that are intended to produce electricity for sale to a utility and/or other customers for off-site consumption shall be prohibited, except as a special land use in the General Industrial Zoning District under § 770-44 General Industrial, Subsection C, Special land uses, Subsection (2)(b), Electrical power manufacture. Wind or solar energy systems developed as a special land use in the General Industrial Zoning District shall be subject to the required standards of this section.

C. Standards specific to wind energy systems.

(1) Number of systems per lot. No more than one ground-mounted or freestanding wind energy system may be placed on any lot of record. Arrays of multiple-turbine roof-mounted wind energy systems may be allowed, provided that they are architecturally integrated with the building upon which they are attached as determined by the Zoning Administrator, and otherwise comply with the required standards of this section.

(2) Height.

(a) The total system height of a ground-mounted or freestanding wind energy system shall not exceed twice the maximum permitted height for principal structures on a site within or adjacent to any residential or mixed-use zoning districts, or 100 feet on any other site that is not adjacent to any residential or mixed-use zoning district. The total system height shall include the height above grade of the fixed portion of the tower to the center of the rotor hub, including the turbine and the highest vertical extension of any blades and rotors.

(b) The height of roof-mounted wind energy systems are subject to the required standards in § 770-21, Application of Zoning District Regulations, Subsection D, Application of height regulations, Subsection (3), Exceptions.

(3) Location and setbacks.

(a) Ground-mounted or freestanding wind energy systems shall not be located within a front yard in any residential or mixed-use zoning district and shall be set back from all lot lines and rights-of-way to the center of the tower base no less than a distance equal to 1/2 the diameter of the rotor and blades, or the minimum required front, side and rear yard setbacks for principal structures within a site's given zoning district, whichever is greater.

(b) No portion of any wind energy system's blades, rotor, or other exposed moving parts shall extend to within 20 feet of the ground, or to within 10 feet of any overhead utility lines.

(c) Roof-mounted wind energy systems shall be setback from the building edge a distance equal to 1/2 the diameter of its rotor and blades, or a distance as determined necessary by the Zoning Administrator. No portion of any roof-mounted wind energy system's blades, rotor or other

exposed moving part shall extend beyond the edge of the building to which it is attached, or to within 20 feet of any outdoor surfaces that are located directly below the system and intended for human occupancy, such as balconies or rooftop patios.

D. Standards specific to solar energy systems.

(1) Number of systems per lot. No more than one ground-mounted or freestanding solar energy system may be placed on any lot of record, and its solar collector shall not exceed 800 square feet of surface area. Solar collectors shall not be counted towards lot coverage, but the area covered or enclosed by solar collectors may be counted as required open space. Arrays of multiple-collector roof-mounted, building-mounted, or facade-mounted solar energy systems may be allowed, provided that they are architecturally integrated with the building upon which they are attached as determined by the Zoning Administrator, and otherwise comply with the required standards of this section.

(2) Height. Ground-mounted or freestanding solar collectors and any mounts shall not exceed a height of 20 feet when oriented at maximum tilt. Building-mounted or facade-mounted solar collectors shall not exceed the height of the building to which they are attached. Roof-mounted solar collectors and any mounts are subject to the standards in § 770-21, Application of zoning district regulations, Subsection D Application of height regulations, Subsection (3) Exceptions.

(3) Location and setbacks.

(a) Ground-mounted or freestanding solar energy systems shall not be located within a front yard in any residential or mixed-use zoning district, and shall be set back from all lot lines and rights-of-way to any part of the system no less than the minimum required front, side and rear yard setbacks for accessory structures within a site's given zoning district.

(b) Roof-mounted solar energy systems shall be setback from the building edge a distance equal to its height or a distance as determined necessary by the Zoning Administrator.

(c) Building-mounted or facade-mounted solar energy systems shall not be attached to any front building facade

that directly faces and is visible from any right-of-way. Such systems may be located on any side or rear building facade, provided that they do not directly face and are not visible from any right-of-way, and provided that they are architecturally integrated with the building upon which they are attached, as determined by the Zoning Administrator.

(d) Solar collectors shall be placed so as not to shade any existing solar collector or adjacent property to the north between the hours of 9:30 a.m. and 2:30 p.m. Eastern Standard Time on December 21 of each year any more than would a structure built to the maximum permitted bulk and area standards for a site's given zoning district.

(4) Solar storage batteries. When solar storage batteries are included as part of the solar energy system, they must be placed in a secure container or enclosure meeting the requirements of the City's building and electrical codes when in use and, when no longer used, shall be disposed of in accordance with all applicable City, state and federal laws and regulations.

E. General standards.

(1) Screening. Landscape screening in accordance with § 770-90, Landscaping, greenbelts, buffers and screening, Subsection D, Screening between land uses, shall be provided along all property lines to mitigate aesthetic impacts upon the neighborhood if a ground-mounted or freestanding wind or solar energy system is located within or adjacent to any residential or mixed-use zoning districts, except when a principal structure is placed between the system and a property line. Roof-mounted wind or solar energy systems shall be effectively screened as determined necessary by the Zoning Administrator.

(2) Access and safety. All wind or solar energy systems shall be designed and installed so as to prevent unauthorized access to electrical and mechanical components and shall be secured or locked at all times when service personnel are not present. All ground-mounted or freestanding wind or solar energy systems shall be adequately enclosed by a six-foot fence, or placed within a yard that is entirely enclosed by a six-foot fence, in accordance with the provisions of Chapter 323, Fences. All climbing apparatus shall be located at least 12

feet above ground, and any tower must be designed to prevent climbing within the first 12 feet.

(3) Lighting. Exterior lighting from a direct source upon a wind or solar energy system shall be prohibited. No lights shall be installed on a tower or any other part of a wind or solar energy system, unless required to meet federal aviation regulations.

(4) Controls. All wind energy systems shall be equipped with manual and automatic override brakes in order to limit the blade rotation speed to within its design limits, to prevent uncontrolled rotation and excessive pressure on the tower, rotors, blades and other components, and to shut down turbines in the event of an electrical outage.

(5) Underground wiring. All wiring connected with a wind or solar energy system shall be underground, except for wiring that runs from the turbine to the base of the wind energy systems, and all wiring associated with roof-mounted wind energy systems, and roof-mounted, building-mounted, or facade-mounted solar energy systems.

(6) Noise and electrical disturbance. All wind energy and solar systems shall comply with the required standards of § 770-94, Noise and vibrations, and § 770-95, Electrical disturbance, electromagnetic or radio frequency interference.

(7) Signs. All signs on a wind or solar energy system visible from any right-of-way or adjacent property shall be prohibited, except for the manufacturer's or installer's identification on the nacelle or solar collector, appropriate warning signs, or the owner and/or operator's identification.

F. Access easements.

(1) The enactment of this section does not constitute the granting of an easement by the City for access to wind or solar radiation. The owner and/or operator shall provide covenants, easements, or similar documentation to assure sufficient wind or solar radiation to operate a wind or solar energy system unless adequate accessibility to the wind or solar radiation is provided by the site.

(2) Nothing within this section shall prevent any owner, occupant or other person in control of property from legally placing or planting any vegetation or trees, or legally constructing any structure that may cast a shadow on a solar energy system or

block wind from a wind energy system, provided that such vegetation, trees, or structures comply with the required standards of this chapter and all other applicable laws, codes and ordinances.

G. Removal.

(1) An owner and/or operator shall remove any ground-mounted or freestanding wind or solar energy system when it has not been used for a period of 180 days or more or has otherwise been abandoned. For purposes of this section, the removal of rotors, blades, turbines, solar collectors, solar batteries, or other equipment from a wind or solar energy system, or the cessation of electrical power generation, shall be considered as the beginning of a period of nonuse or abandonment. Nonuse or abandonment may also be proven by reports from an interconnected utility.

(2) Once a ground-mounted or freestanding wind or solar energy system has not been used for a period of 180 days or more or has otherwise been determined to be abandoned, the owner and/or operator shall immediately apply or secure the application for any required demolition or removal permits, and immediately proceed with and complete the demolition and removal, restoring the premises to an acceptable condition as reasonably determined by the Building Official and/or Zoning Administrator.

(3) If the required removal of a wind or solar energy system has not been lawfully completed within 60 days of the applicable deadline, and after at least 30 days' written notice by the City Attorney, Building Official, and/or Zoning Administrator, the City may pursue legal action to remove or secure the removal of the system at the owner's and/or operator's sole expense.

(4) The Zoning Administrator and/or Building Official may require that an application for a ground-mounted or freestanding wind or solar energy system include a security to be posted at the time of receiving a building permit to ensure its removal when it has been abandoned or is no longer in use, as provided in this section. The security may, at the election of the owner and/or operator, be in the form of cash; surety bond; letter of credit; or an agreement in a form approved by the City Attorney and recordable at the office of the Register of Deeds, establishing a promise of the owner and/or operator to timely remove the wind or solar energy

system as required under this section, with the further provision that the owner and/or operator shall be responsible for the payment of any costs and attorney's fees incurred by the City in securing removal. The City's actual costs and reasonable administrative charges to remove or secure the removal of a wind or solar energy system may be drawn or collected from such security.

H. Applications and permits. The owner and/or operator of any wind or solar energy system shall obtain a building permit, along with any other permits required by federal, state and local agencies, prior to erecting a system. Wind or solar energy systems shall comply with all applicable state and City construction and electrical codes and City building permit requirements, and also all requirements of the Federal Aviation Administration, the Michigan Airport Zoning Act (Public Act 23 of 1950, MCLA § 259.431 et seq.), the Michigan Tall Structures Act (Public Act 259 of 1959, MCLA § 259.481 et seq.), and all other applicable state and federal regulations.

(1) Wind energy systems. Applications for permits to install a wind energy system shall include a site plan prepared in accordance with § 770-12, Site plan review, along with the following additional information:

(a) The location of all buildings within 200 feet of the property including exterior dimensions, height and uses.

(b) The location and dimensions of any other natural or man-made features within 200 feet of the property, such as trees, overhead utility lines, utility poles and towers, streets and rights-of-way, wireless community devices, etc.

(c) The plans and specifications identifying all parts of the system, including, but not limited to, the manufacturer and model, turbine, tower height and type, rotor diameter, foundation, any accessory equipment, and the manufacturer's electrical plans and specifications.

(d) Certification from a licensed engineer or qualified professional that the manual and automatic override brakes have been designed for the proposed system.

(e) Evidence that the applicant has notified the affected utility of the intent to install an interconnected customer-owned generator, and that the generator meets the

minimum requirements established by the affected utility, the Michigan Public Service Commission, the Federal Energy Regulatory Commission, and all other applicable state and federal standards. Off-grid systems shall be exempt from this requirement.

(f) Evidence from a qualified professional that the site is feasible for a wind energy system, or that covenants, easements and other assurances to document sufficient wind to operate the wind energy system have been obtained.

(g) Evidence that the proposed wind energy system will comply with applicable federal aviation regulations, including any necessary approvals from the Federal Aviation Administration.

(h) A visual simulation that includes views from all rights-of-way within 500 feet.

(i) Any other evidence or information as required by the Zoning Administrator and/or Building Official.

(2) Solar energy systems. Applications for permits to install a solar energy system shall include a site plan prepared in accordance with § 770-12, Site plan review, along with the following additional information:

(a) The plans and specifications identifying all parts of the system, including, but not limited to, the manufacturer and model, solar collector or generator, mount height and type, foundation, solar batteries, any accessory equipment, and the manufacturer's electrical plans and specifications.

(b) Evidence that the applicant has notified the affected utility of the intent to install an interconnected customer-owned solar collector, and that the collector meets the minimum requirements established by the affected utility, the Michigan Public Service Commission, the Federal Energy Regulatory Commission, and all other applicable state and federal standards. Off-grid systems shall be exempt from this requirement.

(c) Evidence from a qualified professional that the site is feasible for a solar energy system, including between the hours of 9:30 a.m. and 2:30 p.m. Eastern Standard Time on December 21 of each year, or that covenants,

easements and other assurances to document sufficient solar radiation to operate the solar energy system have been obtained.

(d) Evidence that the proposed solar energy system will comply with applicable state and federal regulations.

(e) Any other evidence or information as required by the Zoning Administrator and/or Building Official.

I. Additional and accessory uses.

(1) The applicable standards and requirements of this section shall also apply to anemometer towers used to conduct wind site assessments for possible installation of wind energy systems.

(2) Co-location of wireless communication facilities on any wind or solar energy system shall be subject to the requirements of § 770-88, Wireless communication devices. Co-location of any equipment or facilities other than wireless communication facilities that are not used for wind or solar power purposes shall only be permitted if allowed elsewhere within this chapter.

Zoning Ordinance

Adoption Date: April 20, 2009

Revised Through: December 9, 2019

d. Anticipated manner in which the project will be decommissioned and the site restored.

J. **Complaint Resolution**. The applicant shall develop a process to resolve any potential complaints from nearby residents concerning the construction and operation of the project. The process may use an independent mediator or arbitrator and shall include a time limit for acting upon a complaint. The process shall not preclude any governmental body from acting on a complaint. The applicant shall maintain and make available to nearby residents a telephone number where a project representative can be reached during normal business hours.

Section 138-10.401 Solar Energy Systems

A. **Definitions**

1. Solar Energy System. A solar photovoltaic cell, panel, or array that converts solar energy to usable thermal, mechanical, chemical, or electrical energy.

2. Solar Storage Battery. A device that stores energy from the sun and makes it available in an electrical form.

B. **Rooftop Solar Energy Systems.** Rooftop and building mounted solar energy systems are permitted in all zoning districts, subject to the following regulations:

1. Roof mounted systems shall not extend more than 4 feet above the surface to which it is affixed.

2. No solar energy system may protrude beyond the edge of the roof.

3. A building permit shall be required for installation of rooftop and building mounted systems.

C. **Ground Mounted Solar Energy Systems.** Ground mounted and freestanding solar energy systems are permitted in all zoning districts, subject to the following regulations:

1. Location. The solar energy system shall meet the required front yard setback requirement for the district in which it is located, and be set back a minimum of 5 feet from any side or rear property line.

2. Height

a. The height of the solar energy system and any mounts shall not exceed 10 feet when oriented at maximum tilt.

b. If the solar energy system is located in the front yard between the required front setback line and front building wall of the principal building, the maximum height for the system shall be 42 inches (3.5 feet). Evergreen landscaping that is sufficient to buffer the equipment from view from nearby dwelling units or streets but that will not obstruct the energy collecting surface from solar energy shall be provided.

3. Building Permit. A building permit shall be required for any ground mounted solar energy system.

4. Area. No more than 20% of the total lot area may be covered by a ground mounted solar energy system.

D. **Batteries.** When solar storage batteries are included as part of the solar collector system, they must be placed in a secure container or enclosure when in use, and when no longer used shall be disposed of in accordance with applicable laws and regulations.

E. **Removal.** If a solar energy system ceases to perform its intended function for more than 12 consecutive months, the property owner shall remove the collector, mount, and associated equipment and facilities no later than 90 days after the end of the 12 month period.

CHAPTER #45

CITY OF SOUTHFIELD ZONING CHAPTER

MAYOR

Kenson J. Siver

COUNCIL

Lloyd Crews, Council President
Linnie Taylor, Council President Pro Tem
Daniel Brightwell
Donald F. Fracassi
Myron Frasier
Michael A. Mandelbaum
Tawnya Morris

PLANNING COMMISSION

Donald Culpepper, Chairman
Steve Huntington, Vice Chairman
Latina Denson
Jeremy Griffis
Anthony Martin
Jacquetta Miah
Robert L. Willis

Section 5.60-B **SOLAR ENERGY SYSTEMS (Amended – Ordinance No. 1590 – 4/23/12)**

A. Purpose and Intent

The purpose of this Section is to establish guidelines for the siting of Solar Energy Systems. It is the further purpose and intent of this Section to:

1. To promote the safe, effective and efficient use of Solar Energy Systems in order to reduce the consumption of fossil fuels in producing electricity and decrease the air and water pollution that results from the use of conventional energy sources.
2. Preserve and protect public health, safety, welfare and quality of life by minimizing the potential adverse effects of Solar Energy Systems, including aesthetic impacts and risks to the property values of adjoining properties.
3. To establish standards and procedures by which the siting, design, engineering, installation, operation and maintenance of Solar Energy Systems shall be governed.

B. Definitions. The following definitions shall apply in this Section:

Solar Energy System: shall mean a solar photovoltaic cell, panel, or array that converts solar energy to useable thermal, mechanical, chemical, or electrical energy.

Solar Storage Battery: shall mean a device that stores energy from the sun and makes it available in an electrical form.

C. Applicability. This Section shall apply to all Solar Energy Systems proposed to be constructed after the effective date of this ordinance. All Solar Energy Systems constructed prior to the effective date of this ordinance shall not be required to meet the requirements of this ordinance; however, any physical modification to an existing Solar Energy System that alters the size, type, equipment or location shall require a permit under this ordinance.

D. Roof-mounted Solar Energy Systems: Roof-mounted and building solar energy systems are permitted uses in all zoning districts, subject to the following regulations:

1. Siting and design requirements

(a.) Roof mounted systems shall not extend more than four (4’) feet above the surface to which it is affixed.

(b.) No solar energy system may protrude beyond the edge of the roof.

(c.) A building permit and electrical permit shall be required for installation of roof-mounted or building-mounted systems.

E. Ground- Mounted Solar Energy Systems: Ground-mounted and freestanding solar energy systems are permitted uses in all zoning districts subject to the follow regulations:

1. Siting and design requirements:

(a.) Location:

(i.) The solar energy system shall not be allowed in the front yard between the property line and the front building wall. The solar energy system may be located in the side or rear yards and be set back a minimum of five (5') feet from any side or rear property line.

(b.) Height:

(i.) The height of the solar energy system and any mounts shall not exceed ten (10') feet when oriented at maximum tilt.

(ii.) If the solar energy system is located in a side yard, the maximum height for the system shall be forty-two (42") inches or three and one half (3 ½') feet. Evergreen landscaping that is sufficient to buffer the equipment from view from near-by dwelling units or streets but that will not obstruct the energy collecting surface from solar energy shall be provided.

(c.) Building Permit:

(i.) A building permit and electrical permit shall be required for any ground-mounted solar energy system.

(d.) Area:

(i.) No more than twenty (20%) percent of the total lot area may be covered by a ground-mounted solar energy system.

F. Batteries: When batteries are included as part of the solar collector system, the must be placed in a secure container or enclosure when in use, and when no longer used shall be disposed of in accordance with applicable laws and regulations.

G. Removal: If a solar energy system ceases to perform its intended function for more than twelve (12) consecutive months, the property owner shall remove the collector, mount, and associated equipment and facilities no later than ninety (90) days after the end of the twelve (12) month period.

Section 5.60-C RESERVED FOR GEO-THERMAL ENERGY SYSTEMS

SECTION 5.60-D RESERVED FOR RAINWATER HARVESTING SYSTEMS
(Amended – Ordinance 1678 – 7/6/17)

A. Identify opportunities where water can be reused for irrigation or used for indoor greywater reuse. From this, calculate the water need for the intended uses. For example, if a 2,000 sf landscaped area requires irrigation for 4 months in the summer at a rate of 1” per week; the designer must determine how much water will be needed to achieve this goal, and how often the storage unit will be refilled via precipitation. The usage requirements and the expected rainfall volume and frequency must be determined.
B. Rain barrels and cisterns should be positioned to receive rooftop runoff.
C. Provide for the use or release of stored water between storm events in order for the necessary stormwater storage volume to be available.
D. If cisterns are used to supplement greywater needs, a parallel conveyance system must be installed to separate reused stormwater or greywater from other potable water piping systems. Do not connect to domestic or commercial potable water systems.
E. Household water demands must be considered when sizing a system to supplement residential greywater.
F. Pipes or storage units must be clearly marked “Caution: reclaimed water, do not drink”.
G. Screens must be used to filter debris from storage units.
H. Protect storage elements from direct sunlight by positioning and landscaping. Limit light into devices to minimize algae growth.
I. The proximity to building foundations must be considered from overflow conditions. Overflow discharge must be a minimum of 10’ from building foundation.
J. Climate is an important consideration. Capture/reuse systems must be disconnected and emptied during winter to prevent freezing.
K. Cisterns must be watertight (joints sealed with nontoxic waterproof material) with a smooth interior surface, and capable of receiving water from rainwater harvesting system.
L. Covers and lids must have a tight fit to keep out surface water, animals, dust and light.

M. Positive outlet for overflow must be provided a few inches from the top of the cistern.
N. Observation risers must be at least 6” above grade for buried cisterns.
O. Reuse may require pressurization. To add pressure, a pump, pressure tank and fine mesh filter can be used which adds to the cost of the system, but creates a more usable system.
P. Rain barrels require a release mechanism in order to drain empty between storm events. Connect a soaker hose to slowly release stored water to a landscaped area.

to installation, to the extent reasonably feasible.

b. The demolition, removal and restoration of the WECS shall be completed within sixty (60) days after the end of the Non-Use Period.

SECTION 12.05 SOLAR STRUCTURES AND EASEMENTS

A. Permitted. Active and passive solar energy devices, systems or structures shall be permitted in all zoning classifications by right, subject to administrative approval, except when such solar devices or architectural features project into required front or side yards, or are free-standing elements in a required front or side yard, in which case they are subject to site plan review in accordance with Article 8.

B. Maximum Height of Structures. Passive solar energy structures, such as flat plate collectors, photovoltaic cells, etc., which are roof-mounted or integrated otherwise into the roof structure shall not be included in the calculation of maximum height. Active solar energy structures, when mounted on either freestanding structural elements or integrated architecturally with a principal or accessory building shall not exceed a height of forty (40) feet.

C. Easements. A landowner may enter into an easement, covenant, condition or other property interest in any deed or other instrument, to protect the solar skyspace of an actual, proposed or designated solar energy structure at a described location by forbidding or limiting activities, land uses, structures and/or trees that interfere with access to solar energy. The solar skyspace must be described as the three (3) dimensional space in which obstruction is prohibited or limited. Any property owner may give or sell his right to access to sunlight. Such Solar Access Easements shall be recorded and copies shall be kept on file with the Troy Building Department.

SECTION 12.06 ENVIRONMENTAL PERFORMANCE STANDARDS

A. Intent. No use, unless otherwise allowed, shall be permitted within any district which does not conform to the following minimum requirements of use, occupancy, and operation.

B. Airborne Emissions.

1. Air Contaminants. All airborne emissions shall, at a minimum, comply with the applicable Federal and State standards.

2. Smoke.

a. It shall be unlawful for any person, firm, or corporation to permit the emission of

City of Birmingham
A Walkable Community

MEMORANDUM

Planning Division

DATE: **April 14th, 2021**

TO: **Jana Ecker, Planning Director**

FROM: **Nicholas Dupuis, City Planner**

SUBJECT: **Window Glazing Standards – Study Session #4**

On November 13th, 2019, the Planning Board discussed the potential for ordinance amendments encompassing the Window Standards outlined in Article 3, Section 3.04(E) and Article 4, Section 4.90 of the Zoning Ordinance. The Planning Board directed City Staff to (1) research any possible differences in the Visual Light Transmittance (VLT) figures between different manufacturers and (2), research other cities to determine what VLT figures are used.

Upon contacting representatives at Guardian Glass, Midwest Glass Fabricators, Michigan Glass Coating, and Service Glass, it was apparent that there is no noticeable difference in glass between manufacturers. That is, all else being equal, a pane of glass with a low-e coating at 68% Visual Light Transmittance from manufacturer X will look the same as the same pane of glass from manufacturer Y. The results may differ based on what type of glass is used in the construction, whether the glass is single pane, double pane or laminated, whether a film is used or not, etc.

Additionally, the research done into the transparency requirements in other communities was confirmed and/or updated. The table below summarizes the confirmed VLT figure present in other Michigan communities, as well as some new figures:

Grand Rapids, MI	70% VLT minimum
Ferndale, MI	60% VLT minimum, 20% Reflectance
Muskegon, MI	70% VLT minimum
West Bloomfield, MI	75% VLT minimum
Rochester Hills, MI	65% VLT minimum
Pontiac, MI	Non reflective, non-tinted
Detroit, MI	70% VLT minimum
Kalamazoo, MI	Clear, non reflective

On January 8th, 2020, the Planning Board discussed the glazing ordinance amendments again, and expressed interest in hearing from more professionals such as a mechanical engineer, a glass vendor or supplier, or a glass contractor or installer. At that time, the Planning Division was unable to find and secure any additional professionals or glass experts to add any new information to the conversation other than the professionals that were already involved up to that point.

On July 22nd, 2020, the Planning Board reviewed the proposed ordinance language alongside a glass professional from Guardian Glass, who offered expertise and clarity on the proposed amendments and what is available in the glass world, and what the effect is on energy codes.

The Planning Board entertained ideas for including low iron glass to the definition and discussing other items such as shelving and merchandise in windows. Ultimately, the Planning Board directed City Staff to make a few minor changes including eliminating the bronze requirement from Section 3.04 (E)(4), and adding low iron glass and no tint to the definition of clear glazing for final consideration before the public hearing.

The following ordinance amendments have been updated to reflect the most recent research.

ORDINANCE NO._____

THE CITY OF BIRMINGHAM ORDAINS:

AN ORDINANCE TO AMEND CHAPTER 126, ZONING, OF THE CODE OF THE CITY OF BIRMINGHAM:

TO AMEND ARTICLE 3, SECTION 3.04(E), ARCHITECTURAL STANDARDS, TO AMEND ARTICLE 4, SECTION 4.90(A), WINDOW STANDARDS, AND TO AMEND ARTICLE 9, SECTION 9.02, DEFINITIONS TO REDFINE CLEAR GLAZING, AND TO ELIMINATE LIGHTLY TINTED GLAZING

Article 3, Section 3.04

E. Architectural standards. All buildings shall be subject to the following physical requirements:
   1. ...
   2. ...
   3. ...
   4. Storefronts shall be directly accessible from public sidewalks. Each storefront must have transparent areas, equal to 70% of its portion of the facade, between one and eight feet from the ground. The wood or metal armature (structural elements to support canopies or signage) of such storefronts shall be painted~~, bronze~~, or powder-coated.
   5. Storefronts shall have mullion systems, with doorways and signage integrally designed. Mullion systems shall be painted, powder-coated, or stained.
   6. The glazed area of a facade above the first floor shall not exceed 35% of the total area, with each facade being calculated independently.
   7. Clear glazing is required on the ~~first floor. Lightly tinted glazing is permitted on upper floors only~~ **storefront facade**. Windows shall not be blocked with opaque materials or the back of shelving units or signs.

Article 4, Section 4.90 – Window Standards (WN)

A. Storefront Windows: Ground floor facades shall be designed with storefronts that have windows, doorways and signage, which are integrally designed. The following standards apply:
   1. No less than 70% of a storefront/ground floor façade between 1 and 8 feet above grade shall be clear glazing.
   2. Only Clear glazing is permitted on storefront facades ~~at the first floor. Lightly tinted glazing above the first floor may be permitted~~. Mirrored glass is prohibited.
   3. Required window areas shall be either pedestrian entrances, windows that allow views into retail space, working areas or lobbies. Display windows set into the wall may be approved by the Planning Board.
   4. Windows shall not be blocked with opaque materials or the back of shelving units or signs.
   5. The bottom of the window shall be no more than 3 feet above the adjacent exterior grade.

Article 9, Section 9.02 – Definitions

Clear Glazing: Glass and other transparent elements of building facades with **low iron content, no tint,** a minimum visible light transmittance of ~~80%.~~ **66% and a reflectivity of 15% or less.**

~~Lightly Tinted Glazing: Glass and other transparent elements of building facades with a minimum visible light transmittance of 70%.~~

CITY OF BIRMINGHAM
REGULAR MEETING OF THE PLANNING BOARD
WEDNESDAY, JULY 22, 2020
Held Remotely Via Zoom And Telephone Access

Minutes of the regular meeting of the City of Birmingham Planning Board held on July 22, 2020. Chairman Scott Clein convened the meeting at 7:35 p.m.

A. Roll Call

Present: Chairman Scott Clein; Board Members Robin Boyle, Stuart Jeffares, Bert Koseck, Daniel Share, Janelle Whipple-Boyce, Bryan Williams; Alternate Board Members Jason Emerine, Nasseem Ramin; Student Representative Rachel Hester

Absent: Student Representative June Lee

Administration: Jana Ecker, Planning Director
Eric Brunk, IT Manager
Nicholas Dupuis, City Planner
Laura Eichenhorn, Transcriptionist

07-86-20

B. Approval Of The Minutes Of The Regular Planning Board Meeting of July 8, 2020

Motion by Mr. Boyle
Seconded by Mr. Koseck to approve the minutes of the Regular Planning Board Meeting of July 8, 2020 as submitted.

Motion carried, 7-0.

ROLL CALL VOTE
Yeas: Boyle, Koseck, Whipple-Boyce, Williams, Share, Clein, Jeffares
Nays: None

07-87-20

C. Chairperson's Comments

Chairman Clein welcomed everyone to the meeting and reminded everyone that the meeting was being held under the guidance of the City Attorney and City administration to ensure compliance with Governor Whitmer's executive orders. Chairman Clein then reviewed procedures for the meeting.

07-88-20

D. Review Of The Agenda

APPROVED

There were no changes to the agenda.

07-89-20

E. Study Session Items

1. **Glazing Requirements**

City Planner Dupuis reviewed the item and Kreg Hatfield, from Guardian Glass, was present to answer questions.

Mr. Hatfield explained that:

- All manufacturers calculate VLT and reflectivity percentages in the same way.
- Most people would be unlikely to notice the difference between 66% and 80% VLT.
- When glass gets into the range of 40-50% VLT it tends to begin to look less clear. Tinting would reduce the VLT even further.
- The glass make-up at the Brookside development and the glass make-up at the Daxton Hotel have identical coatings on the glass. The difference is that the Brookside development used a basic clear glass while the Daxton used a low iron glass. The Brookside glass has a VLT of 68% and the Daxton has a VLT of 70% because removing some iron makes glass a bit more clear.
- Glass can be rated in terms of reflectivity both from the inside-out and from the outside-in. It is important to keep those percentages about the same.
- For basic, first floor applications the ordinance should include language about prohibiting tinted glass. There would be no way for property owners to meet the proposed ordinance requirements if they have both tinted glass and low-e coating.
- There would likely be no need to mention low iron glass because it would meet ordinance requirements should a property owner choose to use it. Low iron glass tends to cost significantly more than regular clear glass. It also tends to be a bit more efficient in terms of retaining the heating and cooling of the building's interior.
- Clear glass tends to have a bit of a green hue versus low iron glass. For protection three coats of silver were added to the library windows' glass, and those layers of silver also add a bit of a greenish hue. If the library had used low iron glass with the same layers of silver the green tint would still be present but not as substantially.
- Low iron glass is widely enough available that no property owners would have a difficult time sourcing it should it be required by ordinance. Cost would be the biggest reason not to require low iron glass via ordinance.
- He has not heard of any municipality requiring low iron glass in their ordinances.
- Any glass sample from an architect submitted to the City should specify whether it is low iron glass.
- The Brookside development is the best example of what kind of glass would be permissible under the proposed ordinance language. Brookside's glass is regular clear glass and not low iron.

Mr. Share said the Board should probably not require low iron glass, especially in a time when the City is trying to help retailers weather the financial impacts of the Covid-19 pandemic.

APPROVED

In reply to Mr. Koseck, Planning Director Ecker stated that the ordinance does not specify how many feet from a window shelving must be placed. She said there could be some value in adding that to the ordinance.

City Planner Dupuis said it might also be worthwhile to consider a vertical height limit for shelving if a horizontal one is added.

Mr. Koseck suggested that some of the language could be clarified in Article 3, Section 3.04 of the ordinance. He said 'bronze' should probably be struck from that section.

Ms. Whipple-Boyce concurred with Mr. Koseck regarding removing the word 'bronze'. She said she agreed that it might be useful to have a horizontal distance requirement for how far shelving must be from a window. She said a typical aisle's width might be the appropriate distance. She said it would also be helpful to know the cost difference between low iron and clear glass.

City Planner Dupuis asked how the Board might want a horizontal distance requirement to deal with retail items displayed in a window.

Ms. Whipple-Boyce said that if retailers displayed their merchandise attractively in their windows she would be supportive of that.

Mr. Williams said the Board should come up with language regarding displaying merchandise in windows and shelving before it goes to a public hearing.

In reply to Chairman Clein, Planning Director Ecker said that the ordinance's current restrictions against shelving in the windows work well and are generally enforceable. She said that any examples that seem to be in egregious violation of that standard tend to have existed before the ordinance went into effect.

Mr. Jeffares recommended the Board conclude its discussion about glazing without trying to presently integrate new topics. He noted the Board had been studying glazing for months and had worked hard to prepare for the review, and thought the other topics being raised deserved a similar amount of thoroughness at a future date.

Mr. Koseck said he would be fine with Mr. Jeffares' recommendation that questions of shelving and merchandising in windows be discussed further at a later date.

The Board asked Planning Director Ecker to add 'no tint' and 'low iron glass' to the definition of clear glazing, with the understanding that 'low iron' could possibly be removed after discussion at the public hearing.

Motion by Ms. Whipple-Boyce
Seconded by Mr. Koseck to set a public hearing on August 26, 2020 to consider Zoning Ordinance amendments to Article 3, Section 3.04(E), Article 4, Section 4.90(A) and Article 9, Section 9.02 to change the Clear Glazing standards and definition to require low iron glass, no tint, to relax the Visual Light Transmittance requirements and to add reflectivity requirements.

APPROVED

Mr. Share said he was in favor of moving the topic to a public hearing and not in favor of mandating low iron glass.

Motion carried, 6-1.

ROLL CALL VOTE
Yeas: Whipple-Boyce, Koseck, Williams, Boyle, Clein, Jeffares
Nays: Share

Mr. Boyle echoed Ms. Whipple-Boyce's previous statement that the Board should have comparative costs for low iron and clear glass to review. He said the Board should be aware how a low iron requirement might be layering on costs to development in the City.

Chairman Clein thanked Mr. Hatfield for sharing his expertise with the Board.

2. **Solar Panel Review Process**

City Planner Dupuis reviewed the item.

Ms. Whipple-Boyce said she recently encountered a large solar battery in some work she was doing in another community, and cautioned that the Board might not want to allow any and all ancillary equipment for solar panels to be outside the home given the potential range of sizes.

Mr. Williams said he was fine with solar panels but might be less fine with ancillary equipment on the side of a home given that it might be more prominent in a neighbor's view.

City Planner Dupuis asked if Mr. Williams would prefer the ancillary equipment to be mounted only to the rear of the home, or to possibly be screened in some way.

Mr. Williams said he was not sure what the best approach would be. He said he thought it would depend on the house, the location of the neighboring properties, and the type of equipment.

Planning Director Ecker said that moving the equipment to the rear of a home would have the benefit of being further from a neighbor's yard because of the greater required setback. She noted that, in contrast, equipment on the side of a home might be only five feet from the property line.

Ms. Whipple-Boyce agreed that placement would depend on the size of the equipment. She said that a small electric meter or connection into the house to the battery need not be limited to the rear or interior of a home, whereas larger equipment should be. She said that the Board could likely specify appropriate locations with more information on the most commonly used kinds of equipment.

City Planner Dupuis said he could find pictures of the City's most recent solar panel approvals to provide the Board with a better sense of the size of the ancillary equipment.

APPROVED

Mr. Jeffares noted how helpful it was to have Mr. Hatfield consulting the Board during their glazing discussion, and said it would be equally helpful to find someone as well-versed in solar power technologies. He observed that the Board was doing some guesswork in the current discussion and thought it would be better to get more specific answers. He said that consulting with someone knowledgeable in the field would have the additional benefit of informing the Board on how the technology is trending, so they could factor those considerations into the ordinance language as well.

Mr. Williams agreed with Mr. Jeffares. He said that the proposed language regarding ancillary equipment was likely too vague and should be clarified before being advanced to a public hearing.

Ms. Whipple-Boyce said she could email City Planner Dupuis some contact information for someone who might know more about solar power technology.

07-90-20

F. Miscellaneous Business and Communications:

a. Communications

b. Administrative Approval Correspondence

City Planner Dupuis explained that the owners of 266 Elm Street wanted to remove the patio in the rear of their building, to replace it with exposed aggregate, to add eight planters, and to replace the rear fence. He noted that the exposed aggregate would go all the way to the rear fence which would result in the removal of some amount of landscaped area.

Consensus of the Board was to grant administrative approval for the plans.

c. Draft Agenda for the next Regular Planning Board Meeting (August 12, 2020)

- **Master Plan Draft Review**

d. Other Business

07-91-20

H. Planning Division Action Items

a. Staff Report on Previous Requests

b. Additional Items from tonight's meeting

07-92-20

I. Adjournment

APPROVED

No further business being evident, the Chairman adjourned the meeting at 8:44 p.m.

Jana L. Ecker
Planning Director

APPROVED

CITY OF BIRMINGHAM
REGULAR MEETING OF THE PLANNING BOARD
WEDNESDAY, JANUARY 8, 2020
City Commission Room
151 Martin Street, Birmingham, Michigan

Minutes of the regular meeting of the City of Birmingham Planning Board held on January 8, 2020. Chairman Scott Clein convened the meeting at 7:30 p.m.

A. ROLL CALL

Present: Chairman Scott Clein; Board Members Stuart Jeffares, Bert Koseck, Daniel Share, Janelle Whipple-Boyce, Bryan Williams (left 7:32 p.m.); Alternate Board Members Jason Emerine, Nasseem Ramin

Absent: Board Member Robin Boyle

Administration: Jana Ecker, Planning Director
Nicholas Dupuis, City Planner
Nicole Ciurla, City Planner
Laura Eichenhorn, Transcriptionist

01-01-20

B. Approval Of The Minutes Of The Regular Planning Board Meeting of December 11, 2019

Motion by Mr. Williams
Seconded by Ms. Whipple-Boyce to approve the minutes of the Regular Planning Board Meeting of December 11, 2019 as submitted.

Motion carried, 5-0.

VOICE VOTE
Yeas: Share, Williams, Clein, Jeffares, Whipple-Boyce, Koseck
Nays: None
Abstain: Emerine, Ramin

01-02-20

C. Chairperson's Comments

Chairman Clein explained standard Planning Board meeting procedures and when the public would have opportunity to comment on items before the Board.

01-03-20

D. Approval Of The Agenda

APPROVED

There were no changes to the agenda.

01-04-20

E. Preliminary Site Plan Reviews

1. 770 S. Adams (existing office building) – Request for Preliminary Site Plan approval for construction of a new five story mixed use building in the MU3/MU5 zone of the Triangle District (Postponed from December 11, 2019).

Mr. Williams stated that his law firm, Dickinson Wright, represents MD Properties which owns the building immediately to the south of 770 S. Adams. He explained that in order to avoid any conflict of interest he would be recusing himself.

Mr. Williams departed the meeting at 7:32 p.m.

Planning Director Ecker presented the item.

In reply to Ms. Whipple-Boyce, Ross Hoekstra with McIntosh Poris Associates explained that they were not pursuing angled parking off of the alley per Ms. Kroll's recommendation because it takes up more space than the proposed parking design.

Ms. Whipple-Boyce noted angled parking could be a safety benefit by encouraging drivers to pull out and proceed in the correct direction down the one-way alley. She also noted that the plans as submitted provide for parking over the required amount, so that losing a few spaces in order to install angled parking should not necessarily present the applicant with an issue.

Michael Poris with McIntosh Poris Associates stated that angled parking would make those spaces inaccessible to cars entering the alley from N. Worth Street, since the alley is two-way until the last 40 feet closest to N. Adams Road.

Rick Rattner, attorney for the project, said he would like to be able to go before other City Boards with the Planning Board's opinion on the record regarding this project's alley-setback issue. He suggested that this alley should be treated as alleys are treated in the downtown district, with no sideyard setback required. Mr. Rattner asked that the required setback of the building be measured from the center of the alley instead. He explained that this project would greatly benefit the City in terms of helping develop the Triangle District, and that requiring the building to step back any further would be prohibitive to the building's development.

Seeing no further comment from the applicant team, Chairman Clein invited public comment.

Dr. Mitchell Shek spoke as one of the owners of Birmingham MD Properties, located at 800 S. Adams. He emphasized the importance of maintaining the parking lot's ingress, egress, and accessible parking for his practice's patients. He said he looked forward to working with the applicant team to make sure this is accomplished, and that he just wanted that information included in the public record.

APPROVED

Seeing no further public comment, Chairman Clein returned the discussion to the Board.

Mr. Share said it would be helpful to know where the one-way ends in the alley in order to determine the best parking configuration for the project.

Chairman Clein commended the applicant team on the changes made since the previous review of the project. He said his only concerns were making the direction of traffic within the alley clear and making the parking layout beneficial for visitors to both 700 and 800 S. Adams. He said that angled parking, per Ms. Kroll's and Ms. Whipple-Boyce's suggestion, could be a good way to achieve those goals.

Mr. Emerine said that determining where the one-way begins in the alley, where it ends, and whether those aspects would be best designated by striping, signage or both would be a matter for the City's Engineering Department to determine. He agreed that the angled parking could be a good idea and would likely cause the applicant to lose two of the currently laid out retail parking spots.

Planning Director Ecker noted that the Engineering Department provided comments on the project indicating their opinion that the entirety of the alley is one-way, and that traffic flows from east to west.

Chairman Clein suggested that since this was a preliminary site plan, the plan could be approved with requirements to further consider angled parking, to work with the site's neighbors on mutually beneficial parking designs, and to conform with the Engineering and Police Department comments related to the alley.

Mr. Emerine noted that the furthest west parking spaces, closest to the wall, would be difficult to pull into even if the current parking design were maintained. He also said that if a vehicle were proceeding the wrong way down the alley, and another vehicle were to back out of one of those spaces, it would have a high likelihood of resulting in a collision. He said, as a result, that even if the current perpendicular parking design were maintained he would likely request that the applicant remove one or two of those furthest west parking spaces. That would mean that the applicant faces a loss of two parking spaces whether they maintain the current parking layout or switch to the recommended angled parking.

Mr. Koseck said the angled parking spaces would likely increase the safety of parking and driving in the alley.

Chairman Clein spoke to Mr. Rattner's earlier question about the alley setback. Chairman Clein explained that in his work in Detroit his projects use the middle of the alley for calculation of the correct setback. He said in this particular case he had no concerns with regard to the layout of the setback, that it is an example of fine urban planning, and that he would be pleased to see the project moved forward with that consideration.

APPROVED

Mr. Emerine echoed Chairman Clein's comments, saying that cities like Ferndale and Northville do the same thing for calculating setbacks on alleys, and that measuring from the middle is a pretty standard way of doing so.

Mr. Poris asserted that the ordinance says that frontage on a right-of-way determines a front yard which results in a different setback calculation than a side yard designation. He said the frontage on the alley in this case should result in a front yard setback.

Motion by Mr. Share
Seconded by Ms. Whipple-Boyce to approve the Preliminary Site Plan Review for 770 S. Adams with the following conditions: 1. Revisions to the south side setbacks of the building or removal of windows within 10' of the property line, or obtain a variance from the Board of Zoning Appeals; 2. Correction of all site, landscape, elevations, streetscape and engineering plans showing consistency on all, and demonstrating that all zoning requirements have been met; 3. The addition/clarification of 43 bike racks on site; 4. A photometric plan and material samples and specifications will be required at Final Site Plan and Design Review; 5. Compliance with the requirements of all departments; and, 6. The conversion of parking spaces fronting on the alley to be angled so that the front of the vehicle would be facing northwest.

Mr. Share added that if the motion passes it should be clear that the Planning Board sees the project as worthwhile, and the minutes should accurately reflect that for the benefit of the Board of Zoning Appeals.

Motion carried, 7-0.

VOICE VOTE
Yeas: Share, Whipple-Boyce, Clein, Emerine, Jeffares, Koseck, Ramin
Nays: None

01-05-20

F. Study Session Items

1. 2019 Administrative Approval Report

Planning Director Ecker presented the item.

Chairman Clein invited the Planning Department to keep the Planning Board updated on any frequently appearing administrative approval matters that would be worth further Planning Board discussion.

Planning Director Ecker confirmed that, when they arise, frequently appearing matters are brought to the attention of the Planning Board for potential future discussion, such as the issue of solar panels which will be discussed by the Board later this evening.

APPROVED

2. Master Plan Review Process Update

Planning Director Ecker presented the item. She explained that the City Commission approved the proposal as submitted with the exception that the schedule would start in February 2020, and not January 2020. She stated that in December 2019 the City Commission approved the expenditure of up to $28,600 for additional public engagement activities. That figure included the potential for two different round-table discussions, a drop-in clinic, and two additional short surveys. Should the Board want to pursue any of those options, they would make a recommendation to the City Manager who would disburse the requisite funds should he approve of the recommendation.

Planning Director Ecker said the scheduled Planning Board master plan discussions would be publicized on the City's website, the Master Plan website, and all City social media channels. Sarah Traxler, one of the local members of the Master Plan team, would likely be attending each meeting and giving a presentation of the evening's master planning topic. Those presentations would also be included in the Planning Board's agenda packets the Friday before their Wednesday meetings in order to afford both the public and the Board members time to review the topic. Robert Gibbs, another local member of the Master Plan team, would likely also be present at the meetings.

Planning Director Ecker said that between sessions she would collect any master plan comments submitted to the Planning Department and include them in the agenda packet for the next scheduled master plan meeting so that the Board would have an opportunity to review those as well.

3. Solar Panel Review Process

City Planner Dupuis presented the item.

Mr. Emerine noted that on page 620 of the Planning Board's agenda packet, 4.88 B said 'wind' when it should read 'solar'.

City Planner Dupuis agreed and said he would make the change. He further explained:

- Ancillary solar panel equipment is very small and would be mounted to the wall of whatever building is using it. He said it would be visually unobtrusive and that he had not come across any information on undue noise production by the equipment. He said he would bring the spec sheets for the ancillary equipment to a public hearing once scheduled which would provide both the Board and the public with more information on the items.
- He would clarify the suggested language to explain that the 40 square foot limit on a solar panel system counts all connected panels as part of one system. Since the average solar panel is three-and-a-half feet by five feet, he recommended the 40 square foot limit in order to allow two average-sized solar panels. City Planner Dupuis said he provided the 40 square feet to begin the conversation, and also proposed the number because he was unsure whether it would be appropriate in a residential setting to have more than 40 square feet of solar panels. He noted that some other cities restrict solar panels to occupying no more than a certain percentage of a given lot.

APPROVED

- Ground mounted solar panels could enable residents who do not want to mount panels on their roof to still have access to some solar power. Ground mounted solar panels would also allow businesses to use solar-powered trash compactors.

Ms. Whipple-Boyce said that she did not yet know enough about ground-mounted solar panels, but that if the City proceeded toward allowing them she would prefer that their allowable yard coverage be calculated by percentage and not by a set amount. She also told City Planner Dupuis that there had been a conversation regarding wind energy facilities about ten years hence, and that if he could find the minutes from that conversation it might help provide some useful information on the topic.

Mr. Koseck said the Board might want to consider not allowing solar panels at grade because it could encourage residents to do away with any greenery that could get in the way of the panels. He also said that 40 square feet of solar panels on the ground might not be enough to generate a worthwhile amount of energy. Mr. Koseck added that solar panels are impervious which would also raise ordinance issues in terms of ground cover. Since most people would likely rather not install solar panels at grade anyways, Mr. Koseck said he would just as soon prohibit it to avoid these issues since the potential environmental gain would likely not be significant in those cases.

Mr. Jeffares echoed Mr. Koseck's concerns about ground mounted solar panels and said he would prefer to continue studying that possibility and whether it would be worthwhile.

Ms. Ramin noted that on page 625, in section G, the phrase "If a wind energy facility has not been removed within 30 days a deadline specified by the City" would need to be clarified.

Mr. Share noted that on page 621, Item F, the word should be 'complemented', not 'complimented'. He agreed with Mr. Koseck and Mr. Jeffares that ground mounted solar panels were likely not necessary to pursue at this time.

Chairman Clein expressed agreement with Mr. Koseck, Mr. Jeffares, and Mr. Share regarding ground mounted solar panels.

In reply to Chairman Clein, City Planner Dupuis said he would do more research on the benefits and drawbacks of the anti-reflective coating some other cities' ordinances require for solar panels.

4. Glazing Standards

City Planner Dupuis presented the item.

Mr. Koseck said he had a list of two or three people he would be reaching out to soon who might be able to contribute meaningfully to the glazing standards conversation. He said that once he had done that he would loop City Planner Dupuis in as appropriate.

Chairman Clein explained that in February 2020 and April 2020 there will only be one Planning Board meeting per each month and that both of those meetings are dedicated to master plan discussion. He suggested that Board members look at their calendars to see if a special meeting could be scheduled to wrap up some of these other study session topics. He added that even if

APPROVED

the Board moved forward with a resolution on this item during the present meeting, due to noticing requirements the public hearing would not occur until the second meeting in March 2020. Chairman Clein recommended the Board take the time to do adequate research, as a result, before moving further forward on this.

Mr. Emerine suggested it might be worthwhile to speak with glass contractors in addition to glass vendors in order to get more insight.

Planning Director Ecker said she would recommend reaching out to a mechanical engineer, a glass vendor or supplier, and a glass contractor or installer.

City Planner Dupuis confirmed he would reach out to people who work with glass regularly in architectural settings and would return to the Board with further information.

01-06-20

G. Miscellaneous Business and Communications:

a. Communications

b. Administrative Approval Correspondence

c. Draft Agenda for the next Regular Planning Board Meeting (January 22, 2020)

- Whistle Stop Design Review
- 35001 Woodward - Amended CIS and Amended Preliminary Site Plan
- Fred Lavery Porsche SLUP
- Two small solar panel items

d. Other Business – Discuss amending Rules of Procedure for January 22, 2020 meeting

Motion by Ms. Whipple-Boyce
Seconded by Mr. Share to amend the Rules of Procedure for the Planning Board's January 22, 2020 meeting to allow for the review of the above items as described by Planning Director Ecker.

Motion carried, 7-0.

VOICE VOTE
Yeas: Whipple-Boyce, Share, Emerine, Clein, Jeffares, Ramin, Koseck
Nays: None
Abstain: Emerine, Ramin

APPROVED

01-07-20

H. Planning Division Action Items

a. Staff Report on Previous Requests
b. Additional Items from tonight's meeting

01-08-20

I. Adjournment

No further business being evident, the Chairman adjourned the meeting at 9:11 p.m.

Jana L. Ecker

Planning Director

APPROVED

CITY OF BIRMINGHAM
REGULAR MEETING OF THE PLANNING BOARD
WEDNESDAY, NOVEMBER 13, 2019
City Commission Room
151 Martin Street, Birmingham, Michigan

Minutes of the regular meeting of the City of Birmingham Planning Board held on November 13, 2019. Chairman Scott Clein convened the meeting at 7:30 p.m.

A. ROLL CALL

Present: Chairman Scott Clein; Board Members Robin Boyle, Stuart Jeffares, Bert Koseck, Daniel Share, Janelle Whipple-Boyce, Bryan Williams

Absent: Alternate Board Member Jason Emerine; Student Representatives Sophia Trimble, John Utley

Present in Audience:

Alternate Board Member Nasseem Ramin

Administration: Jana Ecker, Planning Director
Brooks Cowan, City Planner
Laura Eichenhorn, Transcriptionist

11-161-19

B. Approval Of The Minutes Of The Regular Planning Board Meeting of October 23, 2019

Chairman Clein recommended that a typo found in the third paragraph on page nine be changed from "in residential" to "of residential."

Motion by Mr. Share
Seconded by Mr. Williams to approve the minutes of the Regular Planning Board Meeting of October 23, 2019 as amended.

Motion carried, 7-0.

VOICE VOTE
Yeas: Boyle, Clein, Williams, Share, Jeffares, Whipple-Boyce
Nays: None
Abstain: Koseck

11-162-19

C. Chairperson's Comments

APPROVED

Chairman Clein explained standard Planning Board meeting procedures including an explanation of when the public would have the opportunity to comment.

11-163-19

D. Approval Of The Agenda

There were no changes to the agenda.

11-164-19

E. Community Impact Study Review and Preliminary Site Plan Review

1. 469-479 S. Old Woodward (former Mountain King and Talmer Bank) – Request for Community Impact Study acceptance for construction of a new five story mixed use building in the B4/D4 zone district (Postponed from October 23, 2019, Request from applicant to postpone to December 11, 2019).

Chairman Clein noted he had previously recused himself from this matter as his company had a business relationship with a property owner on the same block as the parcel in question. Since that business relationship has concluded, it is the opinion of both the City Attorney ~~and the~~ **based on a previous** Birmingham Ethics Board **determination** that Chairman Clein may participate in discussions regarding this parcel moving forward.

Mr. Williams said he would be more inclined to postpone the matter to a meeting in January 2020.

Seeing no additional comment from the Board, Chairman Clein invited comment from the public.

Jim Arpin noted that this matter has been repeatedly postponed, and asked whether the matter effectively has a permanent place on the Board's agenda.

Chairman Clein said he understood why it would seem that way, and said it was an issue the Board needed to discuss.

Mr. Arpin asked that the Board consider re-noticing the topic once a new date is selected, even though a postponement to a date certain does not require noticing according to City ordinance.

Chairman Clein returned discussion to the Board.

Mr. Share said he would would be willing to provide the applicant with one last date certain as long as the applicant paid for the cost of postage for the item to be re-noticed.

Ms. Whipple-Boyce stated that the reason to postpone to a date certain is to avoid the need to re-notice. She opined that if the Board intended to re-notice the matter regardless, it should be postponed without a date certain to allow the applicant the flexibility of appearing on an agenda when they are certain they are ready.

APPROVED

Mr. Williams concurred with Ms. Whipple-Boyce, adding that it sets a bad precedent if items postponed to dates certain are re-noticed selectively.

Motion by Mr. Williams
Seconded by Ms. Whipple-Boyce to postpone the Community Impact Study Review and Preliminary Site Plan Review for 469-479 S. Old Woodward (former Mountain King and Talmer Bank).

Motion carried, 7-0.

VOICE VOTE
Yeas: Williams, Whipple-Boyce, Boyle, Clein, Share, Jeffares, Koseck
Nays: None

2. 770 S. Adams (existing office building) – Request for Community Impact Study acceptance for construction of a new five story mixed use building in the MU3/MU5 zone of the Triangle District.

Planning Director Ecker presented the item.

John Shekerjian, attorney, and Michael Poris, architect, spoke on behalf of the applicant.

Chairman Clein noted that Form A submitted by the project's consultant included a description of a 'Right-In, Right-Out', which would restrict turns entering and exiting parking. He noted that description was not included elsewhere, and asked that the discrepancy be resolved in the next iteration of the plans.

Mr. Poris explained that the south vehicle entrance is adjacent to the building's lobby.

Chairman Clein asked that the project's consultant and the City consultant review northbound traffic wanting to turn left into the first floor because the current plans may detrimentally impact traffic trying to turn left onto Holland and may include less stacking space than necessary.

Mr. Williams noted that pedestrians will likely be crossing Adams to access the proposed retail, and asked that the project include a note of that in the community impact study (CIS) so the City can consider creating a pedestrian crosswalk in that area.

Mr. Boyle noted that the applicants will be spending an estimated additional $2 million in order to allow occupants to park a second car. He also noted that the dominant land use for the project is parking. Mr. Boyle asserted that if the City seeks to provide more accessible housing, reducing the parking requirements as the master plan is likely to recommend will be a large step towards achieving that.

Mr. Jeffares expressed his approval for the attention the site plan paid to bicycle storage options on-site.

APPROVED

Motion by Mr. Share
Seconded by Mr. Williams to postpone review of the Community Impact Study to December 11, 2019 for the proposed development at 770 S. Adams pending receipt of the following: (1) Drainage plan; (2) Noise study; (3) Phase 1 Environmental Assessment; (4) Details on the location of transformers and providers of all utilities; (5) Traffic data requested by Fleis & VandenBrink; (6) Information on all life safety issues and Fire Dept. approval; and (7) Information on the proposed security system for approval by the Police Department.

Motion carried, 7-0.

VOICE VOTE
Yeas: Share, Williams, Whipple-Boyce, Boyle, Clein, Jeffares, Koseck
Nays: None

Motion by Mr. Williams
Seconded by Mr. Share to postpone the Preliminary Site Plan Review to December 11, 2019 for the proposed development at 770 S. Adams.

Motion carried, 7-0.

VOICE VOTE
Yeas: Williams, Share, Whipple-Boyce, Boyle, Clein, Jeffares, Koseck
Nays: None

11-165-19

G. Study Session Items

1. D5 Study

Planning Director Ecker presented the item.

Mr. Williams observed that the area north of 411 S. Old Woodward is D4 and in the parking assessment district (PAD) while the area south is not, and said that difference may be one of the factors to consider in this discussion moving forward.

Chairman Clein said Mr. Williams' point was well-taken while clarifying that the evening's discussion was about D5 in general and was not regarding any individual parcels.

Seeing no further Board comment, Chairman Clein invited public comment.

In reply to Mr. Arpin, Chairman Clein explained there is already a D5 ordinance in effect, and the goal of this review is to clarify the scope of that ordinance. He said the study was requested to determine whether good urban planning practices would support future rezoning requests for parcels in the area in question.

APPROVED

Planning Director Ecker told Mr. Arpin that the D5 study is available to the public in previous Planning Board agendas posted on the City's website.

In reply to a request by Mr. Arpin, Chairman Clein asked that the City Manager and City Commission consider whether it might be useful to provide the D5 study on thebirminghamplan.com website as well.

Mr. Arpin shared his gratitude for the Board's thoroughness when discussing a CIS, and expressed concern that, in his opinion, the Board was not proceeding as thoroughly when discussing potential zoning changes that would impact a three or four block area of the City.

Chairman Clein thanked Mr. Arpin for his comments.

Patrick Howe, attorney representing the Birmingham Place Condo Association, spoke. He reviewed the minutes from the February 13, 2017 City Commission meeting minutes in order to highlight the original intent of the D5 ordinance. Mr. Howe argued that the only piece of property that was both abutting and adjacent was the south strip next to the 555 Building. He noted that the entire transcript of the D5 portion of the February 13, 2017 City Commission meeting was 18 minutes long, and echoed Mr. Arpin's assertion that more discussion is merited before an amendment to the D5 ordinance is considered.

Motion by Mr. Share
Seconded by Mr. Williams to set a public hearing for December 11, 2019 for the two proposed ordinance amendments to Article 3, section 3.04 (A) and Article 9, Definitions, Section 9.02 as presented on pages 132 and 133 of the Board's November 13, 2019 agenda.

Duraid Markus, owner of 469-479 S. Old Woodward, asked whether an adjacent building's height would be calculated from the height of the closest point of a building, which could be five stories, for example, or from the highest part of a building as a whole, which could extend to nine stories on the far side of a building.

Planning Director Ecker confirmed for Mr. Markus and for Michele Prentiss that a building's height is calculated based off of a building's overall height, and not just the height of the closest part of the building.

Motion carried, 7-0.

VOICE VOTE
Yeas: Share, Williams, Whipple-Boyce, Boyle, Clein, Jeffares, Koseck
Nays: None

2. Glazing Standards

City Planner Dupuis presented the item.

APPROVED

Ms. Whipple-Boyce confirmed based on her research that the 80% VLT glass required in the City's ordinance causes much more heat loss and gain depending on the seasons, increases the cost of heating and cooling the building, could change the capacity of the HVAC to make up for that gain and loss, and that those facts will remain true as long as 80% VLT is required. She said that people in the industry she spoke with advised that if the VLT requirement is lowered to 68% those issues could be mitigated. She said determining how to accommodate low-e glass will have environmental benefits in addition to the benefits it would bring developers and builders.

Mr. Share and Ms. Whipple-Boyce both wondered about possible differences between one manufacturer's 68% VLT glass and another's.

City Planner Dupuis and Planning Director Ecker said they would return with more information on the topic for the Board's next meeting.

In reply to Mr. Boyle, City Planner Dupuis explained glass professionals advised staff that only the VLT and the reflectivity affect the transparency of glass, which is why the recommended wording only mentions those two criteria.

In reply to Chairman Clein, City Planner Dupuis said he could do further research on what other Michigan cities require for VLT since the table with VLT figures included in this item was produced sometime in 2017.

In reply to Chairman Clein, Planning Director Ecker said she would try to find someone who could provide the City with more insight into the various considerations at play in this discussion.

Ms. Whipple-Boyce stressed the environmental impact of this decision and said the decision should move towards the highest VLT glass that does not lead to negative environmental results.

3. Master Plan Review

Planning Director Ecker presented the item.

Chairman Clein thanked Planning Director for putting together the proposed schedule.

Subsequent to discussion, Board consensus was that they would schedule the master plan discussions for regular study session meetings beginning in January 2020 and running through May 2020. Notes would be provided to DPZ after each study session. The Board agreed to start those study session meetings at 7 p.m. instead of 7:30 p.m.

Planning Director Ecker noted that a member of the public could always provide their feedback on a previous meeting's topic as well.

Ms. Whipple-Boyce recommended creating an insert with the schedule of these meetings to mail out to all Birmingham residents in the City's 2020 calendar. She advocated for allowing staff to determine the most appropriate division of the master plan topics over the four or five study sessions.

APPROVED

Mr. Boyle also asked it be recommended to the Commission that the City publicize these master plan study sessions by every means available to the City's communications office.

Chairman Clein strongly concurred with Mr. Boyle's recommendation.

Ms. Whipple-Boyce noted that if a site plan meeting were particularly light one month the Board could address a smaller study session item like this evening's glazing discussion. She also ventured that as the Board provides feedback to DPZ on the master plan topics, DPZ will develop an increasingly clearer understanding of the Board's perspective and how to integrate it into the plan.

Mr. Williams stated that the Board's alternate members should be encouraged to attend and participate in the Board's master plan study sessions.

11-166-19

H. Miscellaneous Business and Communications:

a. Communications
b. Administrative Approval Correspondence
c. Draft Agenda for the next Regular Planning Board Meeting (December 11, 2019)

- Public Hearing to clarify the D5 Zone District Regulations
- CIS and Final Site Plan for 770 S. Adams
- 412-420 E. Frank

d. Other Business

11-169-19

J. Planning Division Action Items

a. Staff Report on Previous Requests
b. Additional Items from tonight's meeting

11-170-19

K. Adjournment

No further business being evident, the Chairman adjourned the meeting at 10:44 p.m.

Jana L. Ecker

Planning Director

APPROVED

From: Alex Bingham <abingham@bhamgov.org>
Sent: Wednesday, March 10, 2021 4:50 PM
To: Debra Conroy
Subject: Re: Birmingham Master Plan

Received.

On Tue, Mar 2, 2021 at 1:16 PM Debra Conroy <dconroy1234@gmail.com> wrote:

> Please forward to the Birmingham City Council The article below includes another reason to oppose the proposed 2021 Birmingham Master Plan.
>
> Problem with 'affordable' housing in rich L.A. neighborhoods - Los Angeles Times
>
> https://www.latimes.com/opinion/story/2021-03-02/letters-to-the-editor-the-problem-with-building-affordable-housing-in-affluent-neighborhoods
>
> Debra Conroy
> 790 Lakeside Drive, Birmingham
> 248 705-0450

--

Alexandria D. Bingham
City Clerk
City of Birmingham
151 Martin Street
Birmingham, MI 48009
(248) 530-1802 Office Direct
(248) 530-1080 Fax
abingham@bhamgov.org

Important Note to Residents

Let's connect! Join the Citywide Email System to receive important City updates and critical information specific to your neighborhood at www.bhamgov.org/citywideemail.

Jana Ecker <jecker@bhamgov.org>

Master Plan.

1 message

Betty Gusho <bgusho@comcast.net> Thu, Feb 25, 2021 at 10:16 AM

To: ndupis@bhamgov.org, pboutros@bhamgov.org, tlonge@bhamgov.org, cballer@bhamgov.org, rackyhoff@hotmail.com, bhost@bhamgov.org, mnickita@bhamgov.org, ssherman@bhamgov.org, tcurrier@beierhowlett.com, Jecker@bhamgov.org, jlwboyce@hotmail.com, jawdish@bhlaw.us.com, jvalentine@bhamgov.org

Hi, I was unable to attend the zoom call last month regarding the master plan. I have read through portions of it, and while it is a nice idea to be inclusive, I worry about property values.

My husband and I worked very hard to purchase a home in one of the premier neighborhoods. We worked long hours, saved our money and started off in a small 1000 sq ft home in Beverly Hills. Several years later we moved to South Glenhurst and eventually to Quarton Lake as we became more established and had enough savings to make the move.

The homes in our neighborhood range from 1 million to 4 million. Not only have the residents paid top dollar for their homes, we pay exorbitant taxes to live in a premier neighborhood.

I am not a realtor, but when doing comps, the realtors always look at the average price per square foot. Having affordable housing (130-180K, I forget the exact numbers) near Quarton and Chersterfield, Oak St. and other areas near by will negatively effect our housing values. Will the City drastically reduce the taxes we pay for our homes?

The idea that Birmingham will provide housing for those that live in the city is nice, but homes are more affordable near Eton, in Beverly Hills, Berkley and Royal Oak. As you know, these neighborhoods are less than 10 minutes away.

I hope the city reconsiders the plan and supports the majority of the residents who have the same concerns and have been paying high taxes to live in this premier neighborhood and city.

Thank you for listening.

Sent from my iPad

From: Alex Bingham <abingham@bhamgov.org>
Sent: Wednesday, March 10, 2021 4:50 PM
To: Dlnolet
Subject: Re: Master Plan 2040 draft/ SEAMS/Clarifications

Received.

On Wed, Mar 10, 2021 at 10:17 AM Dlnolet <dlnolet@aol.com> wrote:

> Dear Commissioners,
>
> The Birmingham web site points out "clarifications" of the first draft suggesting that all additional housing "needed" (700-900 down from 2000) can be accomplished in the downtown and triangle districts which need not be rezoned. Since multifamily housing along the SEAMS is not necessary to accomplish the "vision" set out in the first draft, does this mean the SEAMS proposal will not be part of the 2nd draft/final plan? I ask that this be addressed and clarified at this evening's meeting and that the Commissioners and Planning Board members state for the record whether they are for or against the SEAMS proposal as part of the plan.
>
> Please pass this on to the Commissioners and Board members.
>
> Thank you,
>
> Dave Linden

--

Alexandria D. Bingham
City Clerk
City of Birmingham
151 Martin Street
Birmingham, MI 48009
(248) 530-1802 Office Direct
(248) 530-1080 Fax
abingham@bhamgov.org

Important Note to Residents

Let's connect! Join the Citywide Email System to receive important City updates and critical information specific to your neighborhood at www.bhamgov.org/citywideemail.

From: Alex Bingham <abingham@bhamgov.org>
Sent: Wednesday, March 10, 2021 4:50 PM
To: Jenny Shebib
Subject: Re: Master Plan Multi Family and Low income housing

Received.

On Tue, Mar 9, 2021 at 4:03 PM Jenny Shebib <jcshebib@yahoo.com> wrote:

Dear Birmingham Commissioners:

I have been a resident of Birmingham for the past 30 plus years. And I have always favored the cities master plan ideas until I came across the current plan idea of multi family housing to accommodate lower incomes. I currently live on Shirley (25 years) and love our neighborhood in fact volunteered for Association President for 10+ years early on. Most of the charm in Birmingham is the walk ability and neighbors care of their own properties. I do not understand the city considering multi family housing up Maple between Southfield and Cranbrook. Some of the Cities most beautiful streets and expensive housing.
My confusion is why would the city even consider doing this?

- Could a builder even afford to buy these lots with houses on them and tear them down to rebulild?
- Would it even increase the tax base?
- Could a person with HHI 60-100k be able to afford what was offered? if they could it would decrease the tax base
- it would increase traffic in neighborhoods that are quaint and quiet
- Ascetically it would look AWFUL

And now I'm hearing this is not even going to a city vote! That the commissioners are voting on this. Well I'm here to say I do not want this for my neighborhood. and I will not support any commissioner that votes in favor of it. I will do my best to be vocal to get rid of them. Take this as my STRONG suggestion to not allow this to happen in our beautiful city.

Thank you for your time in reading my strong disapproval of the master plan and multi family low income housing in Birmingham
js

Jenny Shebib

(248)925-8464 cell

jcshebib@yahoo.com

--
Alexandria D. Bingham
City Clerk
City of Birmingham
151 Martin Street
Birmingham, MI 48009
(248) 530-1802 Office Direct
(248) 530-1080 Fax

abingham@bhamgov.org

Important Note to Residents

Let's connect! Join the Citywide Email System to receive important City updates and critical information specific to your neighborhood at www.bhamgov.org/citywideemail.